INTERIOR AND SUPPLEMENTAL RESTRAINT SYSTEM (SRS)

CONTENTS

INTERIOR 52A

SUPPLEMENTAL RESTRAINT SYSTEM (SRS) 52B

INTERIOR

CONTENTS

SPECIAL TOOL 3

INSTRUMENT PANEL* 3

FLOOR CONSOLE 9

TRIMS <3-DOOR MODELS> 11

TRIMS <5-DOOR MODELS> 13

HEADLINING <3-DOOR MODELS> 15

HEADLINING <5-DOOR MODELS> 16

SEAT 17

- Front Seat* 17
- Rear Seat 22

SEAT BELT 25

- Front Seat Belt 25
- Rear Seat Belt 27

WARNINGS REGARDING SERVICING OF SUPPLEMENTAL RESTRAINT SYSTEM (SRS) EQUIPPED VEHICLES

WARNING!

(1) Improper service or maintenance of any component of the SRS, or any SRS-related component, can lead to personal injury or death to service personnel (from inadvertent firing of the air bag) or to the driver and passenger (from rendering the SRS inoperative).

(2) Service or maintenance of any SRS component or SRS-related component must be performed only at an authorized MITSUBISHI dealer.

(3) MITSUBISHI dealer personnel must thoroughly review this manual, and especially its GROUP 52B – Supplemental Restraint System (SRS) before beginning any service or maintenance of any component of the SRS or any SRS-related component.

NOTE

The SRS includes the following components: SRS-ECU, SRS warning lamp, air bag module, clock spring, side impact sensors and interconnecting wiring. Other SRS-related components (that may have to be removed/installed in connection with SRS service or maintenance) are indicated in the table of contents by an asterisk (*).

SPECIAL TOOL

Tool	Number	Name	Use
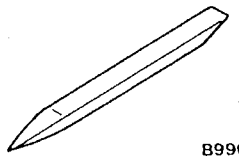 B990784	MB990784	Ornament remover	Removal of switch, trim, etc.

INSTRUMENT PANEL

REMOVAL AND INSTALLATION

For installation of the instrument panel, the bolts and screws described below are used. They are indicated by symbols in the illustration.

Name	Symbol	Size mm (D × L)	Colour	Shape
Tapping screw	a	5×12	–	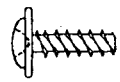 19Z0022
	b	5×20	–	
	c	5×16	–	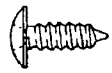 19Z0004
	d	5×16	Black	
Washer-assembled screw	e	5×10	–	 19Z0007
Washer-assembled bolt	f	6×16	–	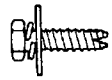 19Z0005
	g	8×20	–	
	h	5×12	–	 19Z0010
	i	6×16	–	

D = Thread diameter
L = Effective thread length

<L.H. drive vehicle>

Caution: SRS

1. **For the passenger side air bag module removal/installation, always observe the service procedures of GROUP 52B – Air Bag Module.**
2. **Do not subject the SRS-ECU to any shocks when removing or installing the instrument panel.**

Pre-removal and Post-installation Operation
Steering Column Mounting Bolt Removal and Installation

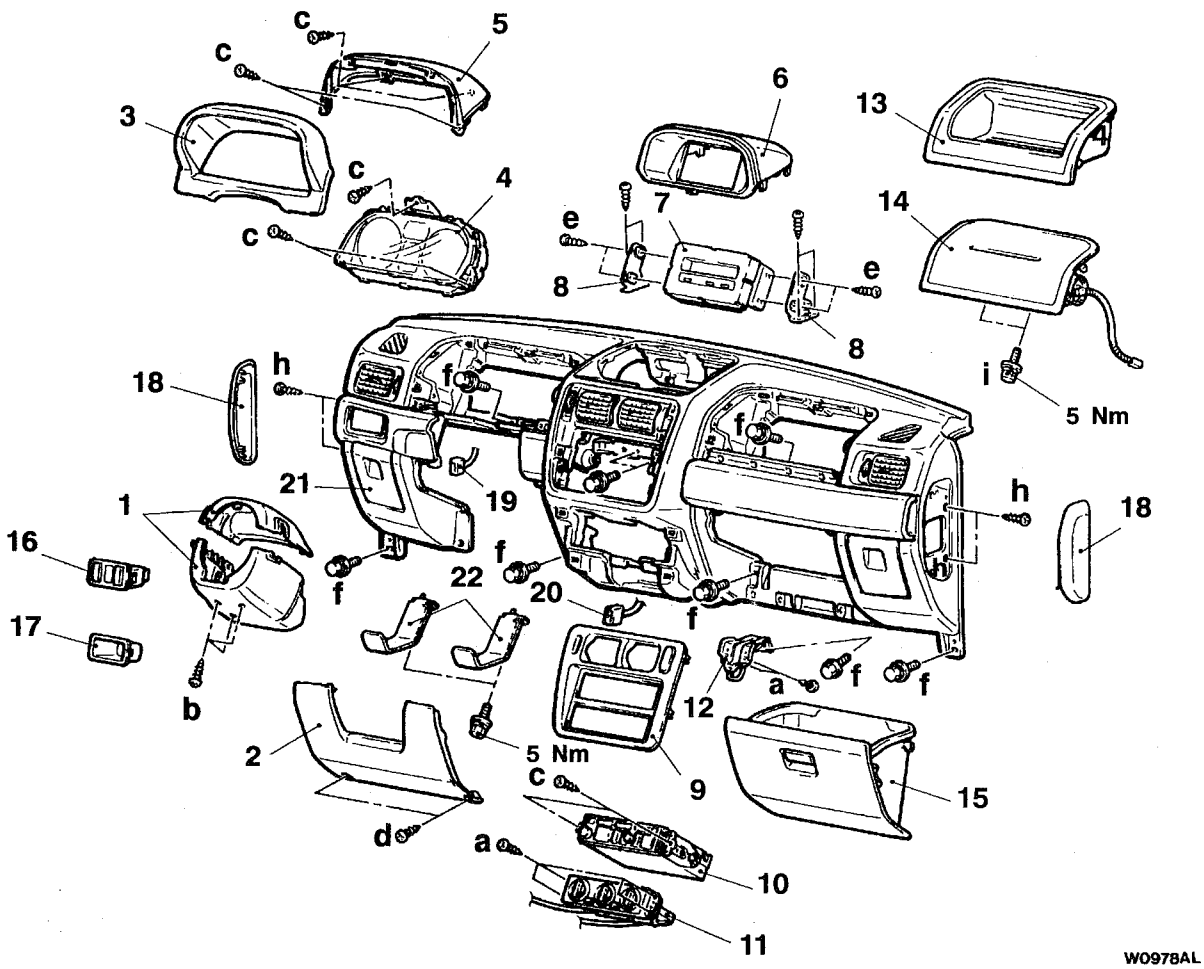

Removal steps

1. Column cover
2. Under cover
3. Meter hood B
4. Combination meter
5. Meter hood A
6. Multi-display hood
7. Clock
8. Multi-display bracket
9. Center panel
10. Radio and tape player
11. Heater control assembly or automatic A/C control panel assembly
12. Glove box striker
13. Instrument tray <Vehicles without front air bag module>
14. Passenger's side air bag module <Vehicles with front air bag module>
15. Glove box
16. Switch panel assembly <Vehicles with fog lamp>
17. Switch plug <Vehicles without fog lamp>
18. Instrument panel side cover
    - Scuff plate (Refer to P.52A-11.)
    - Cowl side trim (Refer to P.52A-11.)
    - Floor console (Refer to P.52A-9.)
    - Front pillar trim (Refer to P.52A-11.)
19. Fog lamp switch connector <Vehicles with fog lamp>
20. Hazard lamp switch connector
21. Instrument panel assembly
22. Knee protector bracket

CLIP AND CLAW POSITIONS

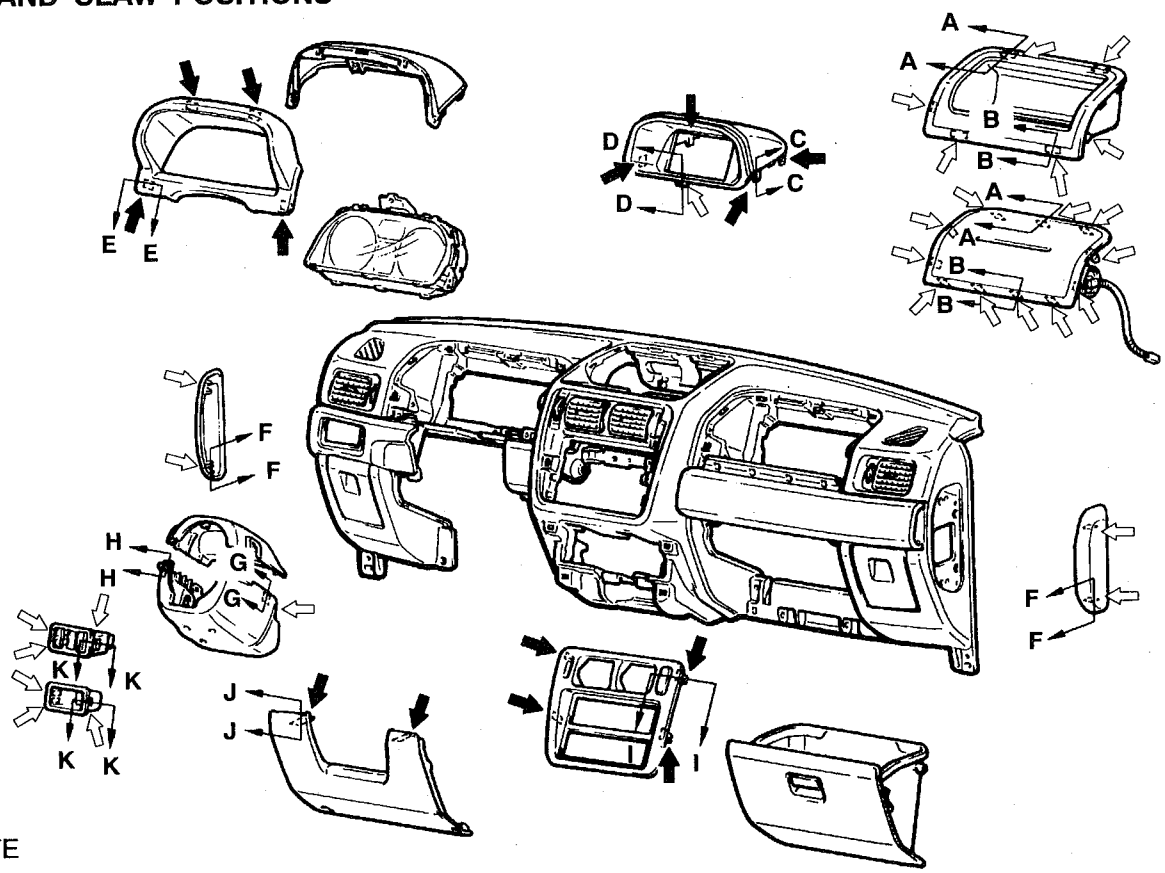

NOTE

⬅ : Clip positions

⇦ : Claw positions

W0979AL

Section A – A

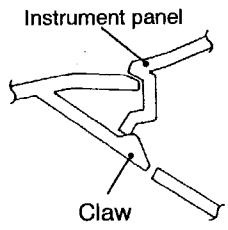

W0980AL

Section B – B

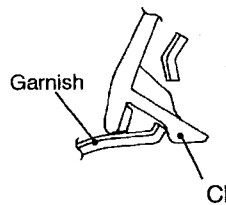

W0981AL

Section C – C

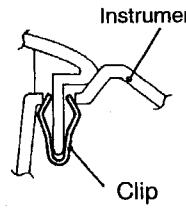

W0982AL

Section D – D

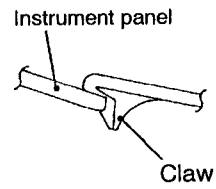

W0983AL

Section E – E

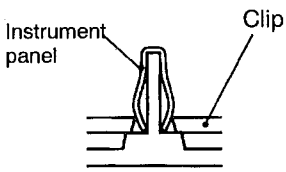

W0984AL

Section F – F

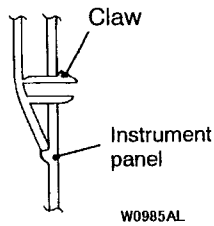

W0985AL

Section G – G

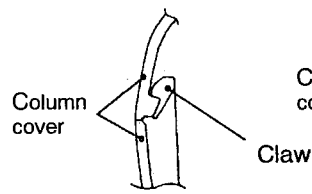

W0986AL

Section H – H

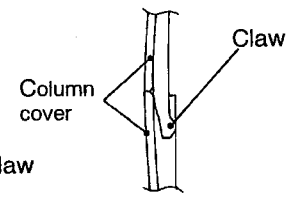

W0987AL

Section I – I

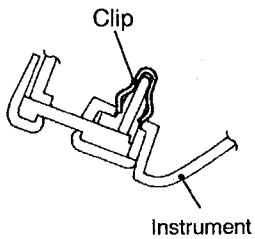

W0988AL

Section J – J

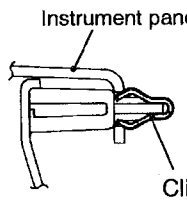

W0989AL

Section K – K

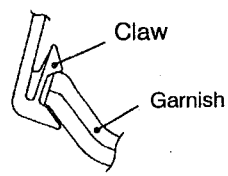

W0990AL

<R.H. drive vehicle>

Caution: SRS

1. **For the passenger side air bag module removal/installation, always observe the service procedures of GROUP 52B – Air Bag Module.**
2. **Do not subject the SRS-ECU to any shocks when removing or installing the instrument panel.**

Pre-removal and Post-installation Operation
Steering Column Mounting Bolt Removal and Installation

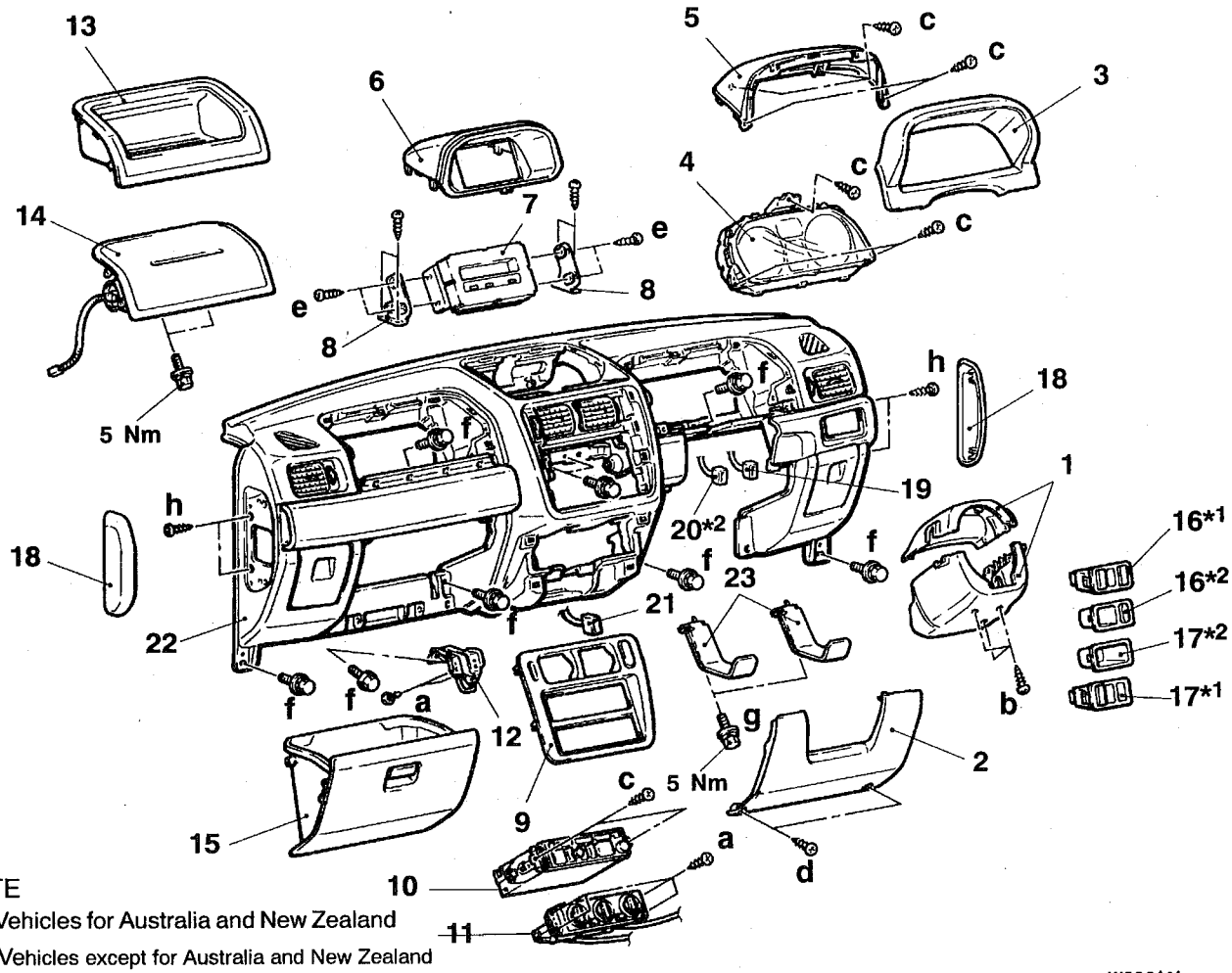

NOTE
*1 : Vehicles for Australia and New Zealand
*2 : Vehicles except for Australia and New Zealand

W0991AL

Removal steps

1. Column cover
2. Under cover
3. Meter hood B
4. Combination meter
5. Meter hood A
6. Multi-display hood
7. Clock
8. Multi-display bracket
9. Center panel
10. Radio and tape player
11. Heater control assembly or automatic A/C control panel assembly
12. Glove box striker
13. Instrument tray <Vehicles without front air bag module>
14. Passenger's side air bag module <Vehicles with front air bag module>
15. Glove box
16. Switch panel assembly <Vehicles with fog lamp>
17. Switch plug or switch panel assembly <Vehicles without fog lamp>
18. Instrument panel side cover
    - Scuff plate (Refer to P. 52A-11.)
    - Cowl side trim (Refer to P.52A-11.)
    - Floor console (Refer to P.52A-9.)
    - Front pillar trim (Refer to P.52A-11.)
19. Fog lamp switch connector <Vehicles with fog lamp>
20. Rheostat connector
21. Hazard lamp switch connector
22. Instrument panel assembly
23. Knee protector bracket

CLIP AND CLAW POSITIONS

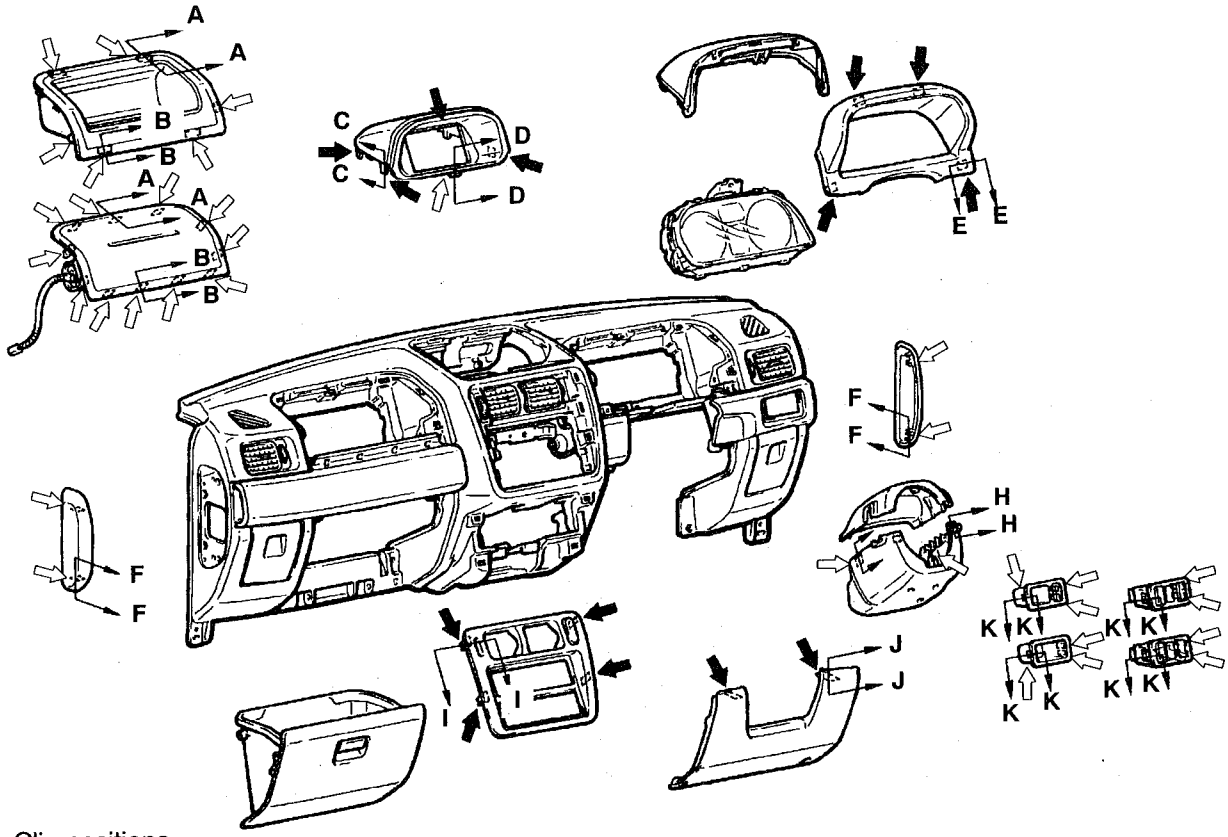

NOTE
⬅ : Clip positions
⇦ : Claw positions

W0992AL

Section A – A

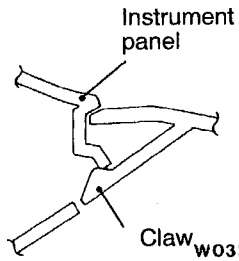

W0325AL

Section B – B

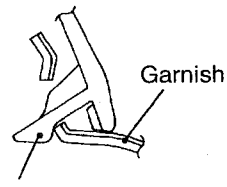

W0326AL

Section C – C

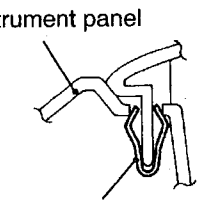

W0327AL

Section D – D

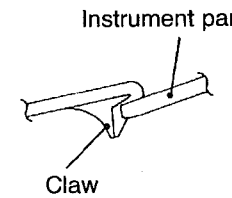

W0328AL

Section E – E

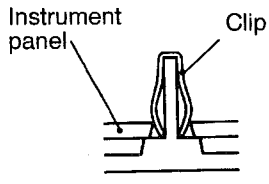

V0786AE

Section F – F

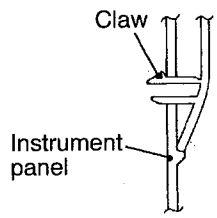

W0324AL

Section G – G

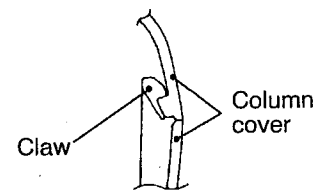

W0330AL

Section H – H

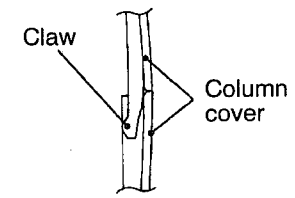

W0329AL

Section I – I

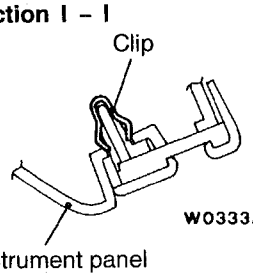

W0333AL

Section J – J

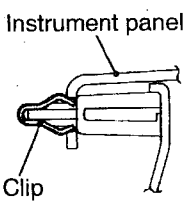

W0332AL

Section K – K

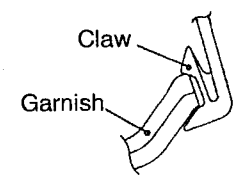

W0331AL

DISASSEMBLY AND REASSEMBLY

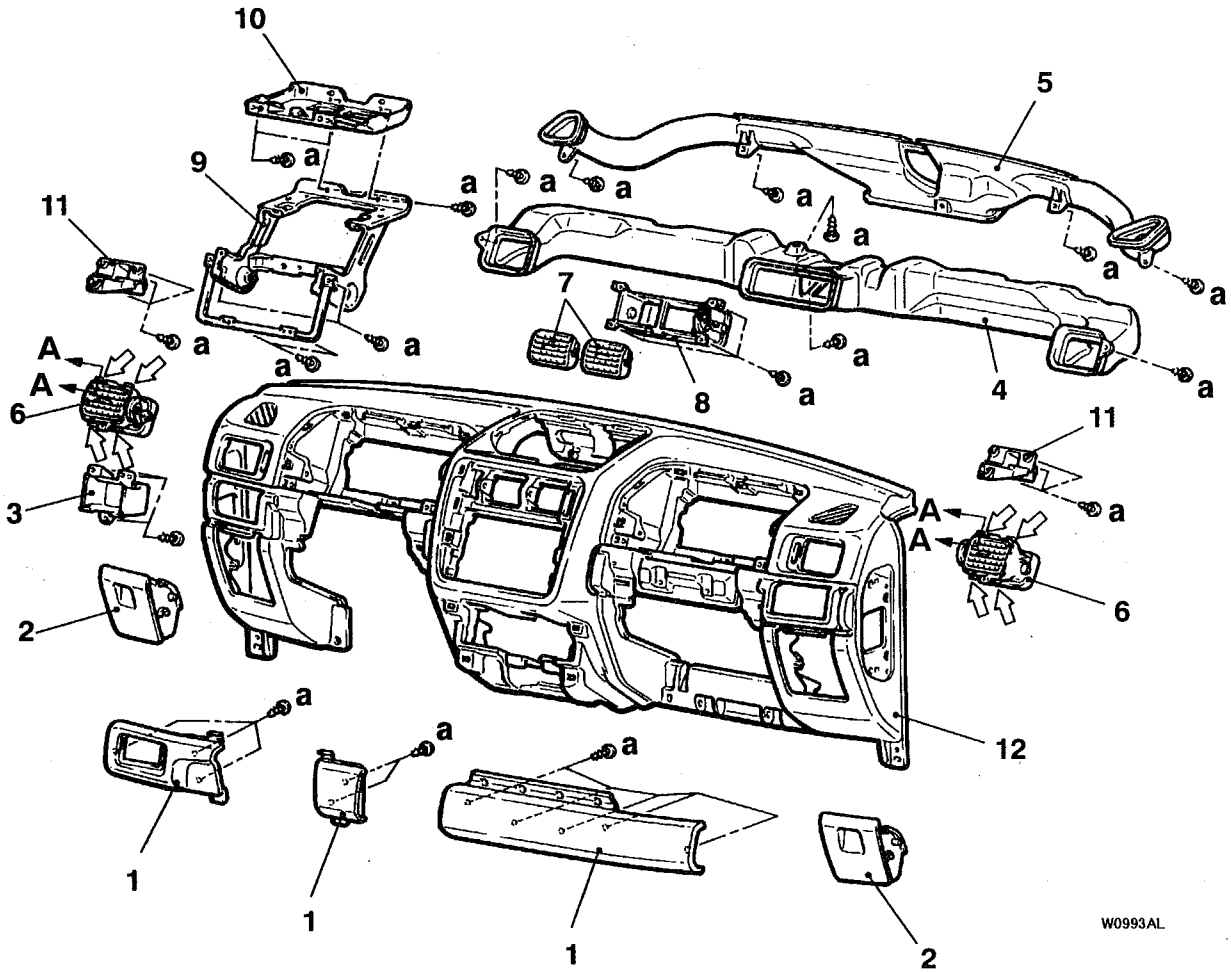

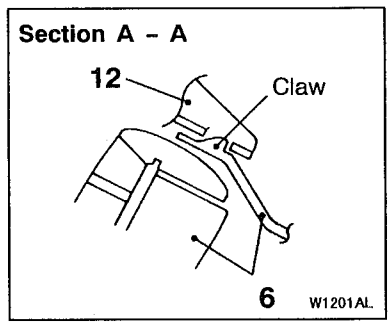

NOTE
⇦ : Claw positions

Disassembly steps

1. Garnish
2. Parcel box
3. Connector holder
4. Distribution duct
5. Defroster duct
6. Side air outlet assembly
7. Center air outlet
8. Center air outlet case
9. Instrument panel reinforcement
10. Center support panel
11. Instrument panel side support bracket
12. Instrument panel

FLOOR CONSOLE

REMOVAL AND INSTALLATION

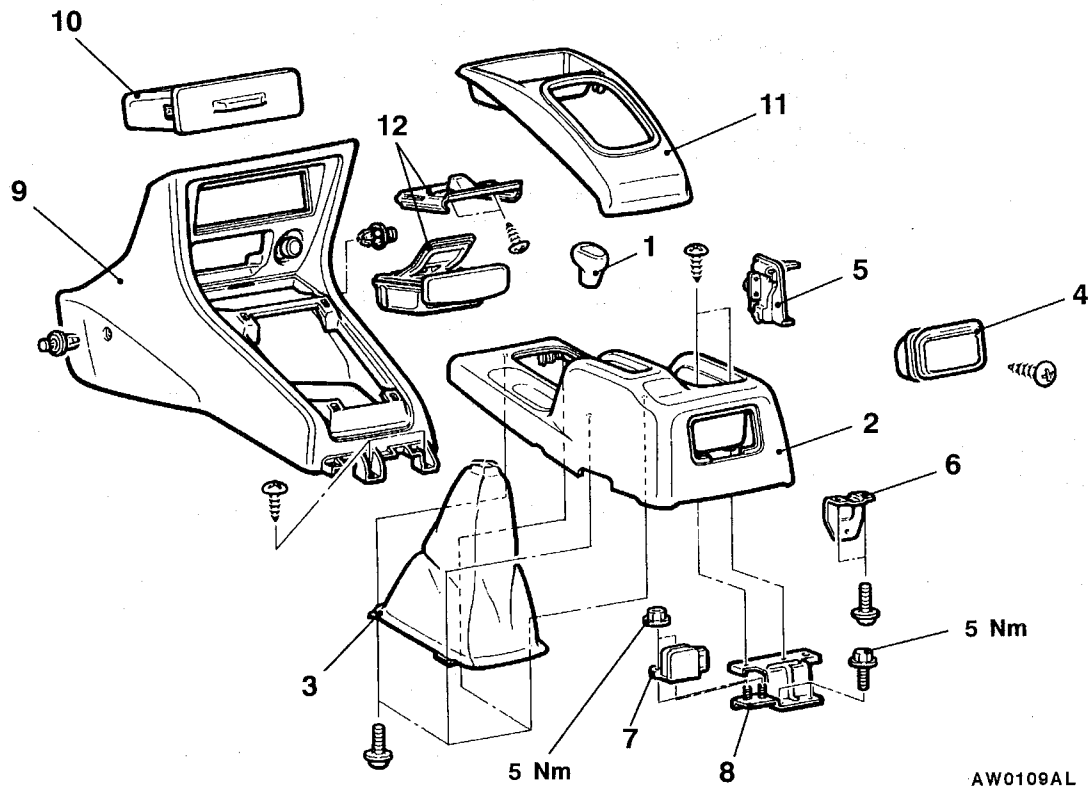

Removal steps

1. Selector nob
2. Rear floor console
3. Transfer lever cover
4. Rear ashtray assembly
5. Holder
6. Ashtray bracket
7. G sensor <Vehicles with ABS>
8. Floor console bracket <Vehicles with ABS>
9. Front floor console
10. Box with lid
11. A/T panel or M/T panel
12. Front ashtray assembly

CLIP AND CLAW POSITIONS

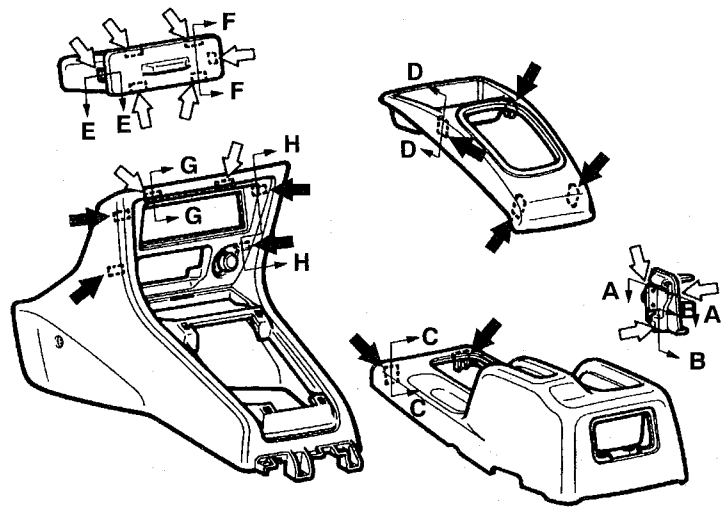

W0250AL

NOTE
⬅ : Clip positions
⇦ : Claw positions

Section A – A

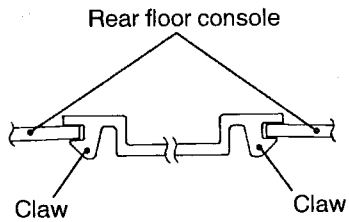

W0251AL

Section B – B

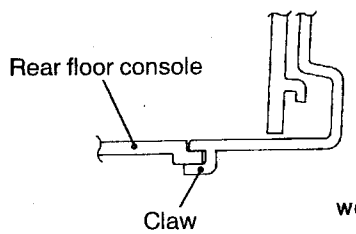

W0256AL

Section C – C

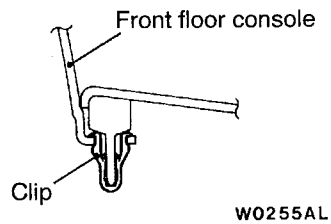

W0255AL

Section D – D

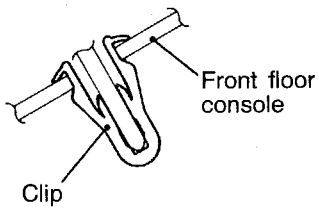

W0254AL

Section E – E

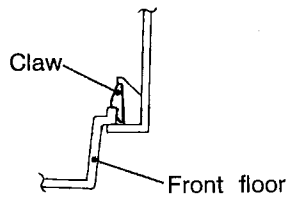

W0252AL

Section H – H

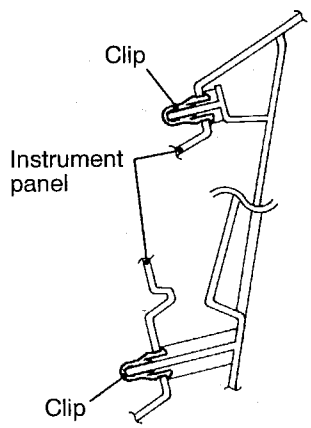

W0257AL

Section F – F

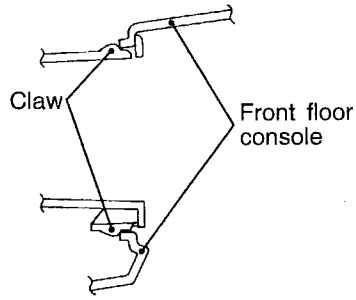

W0253AL

Section G – G

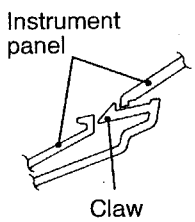

W0262AL

00008903

TRIMS <3-DOOR MODELS>

REMOVAL AND INSTALLATION

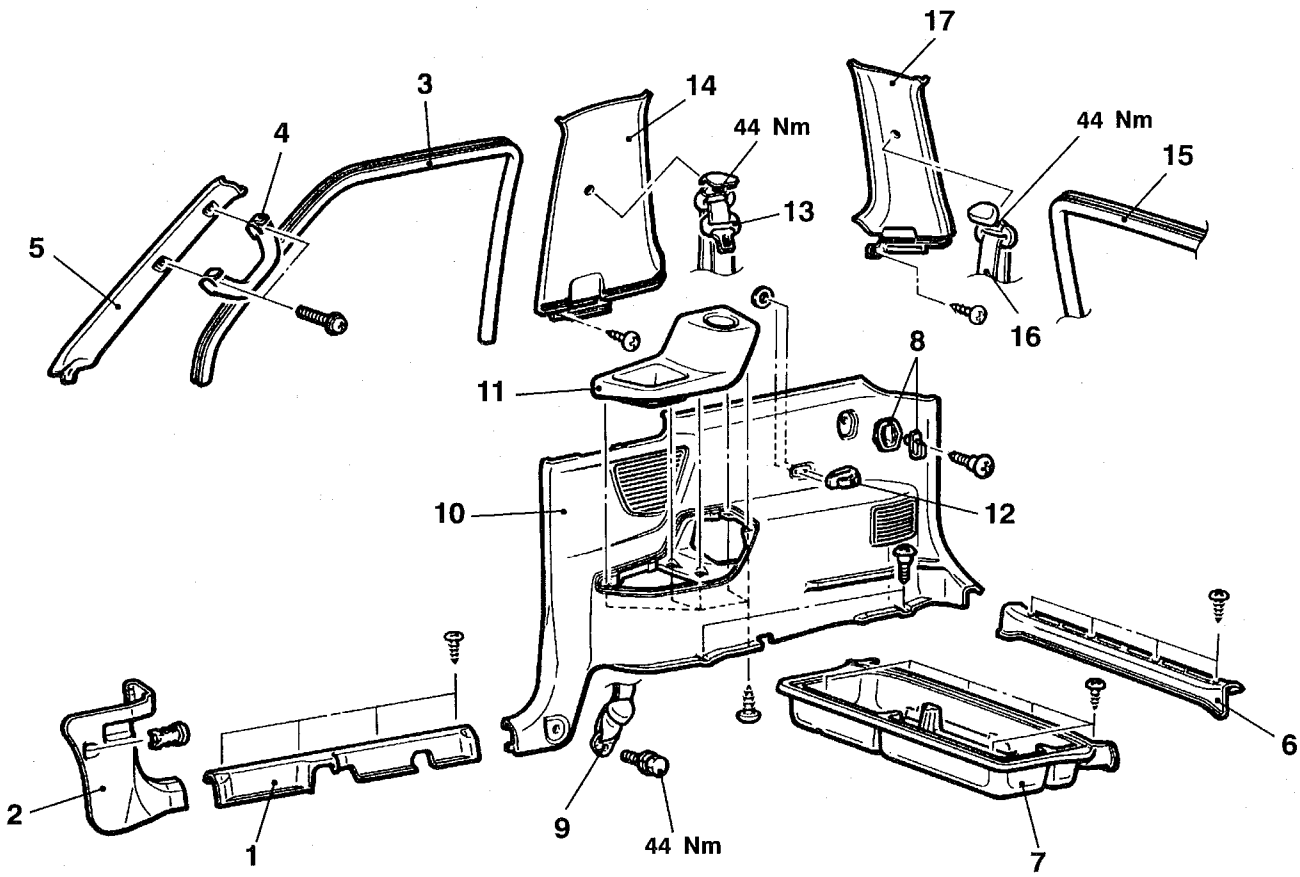

AW0137AL

1. Scuff plate
2. Cowl side trim
3. Front door opening trim
4. Assist grip
5. Front pillar trim
6. Rear step plate <Vehicles for Australia and New Zealand>
- Rear seat (Refer to P.52A-22.)
7. Luggage floor box <Vehicles except for Australia and New Zealand>
8. Luggage room hook
9. Front seat belt connection
10. Quarter trim
11. Quarter box
12. Hook
13. Front seat belt connection
14. Center pillar trim
15. Rear door opening trim
16. Rear seat belt connection
17. Rear pillar trim

CLIP AND CLAW POSITIONS

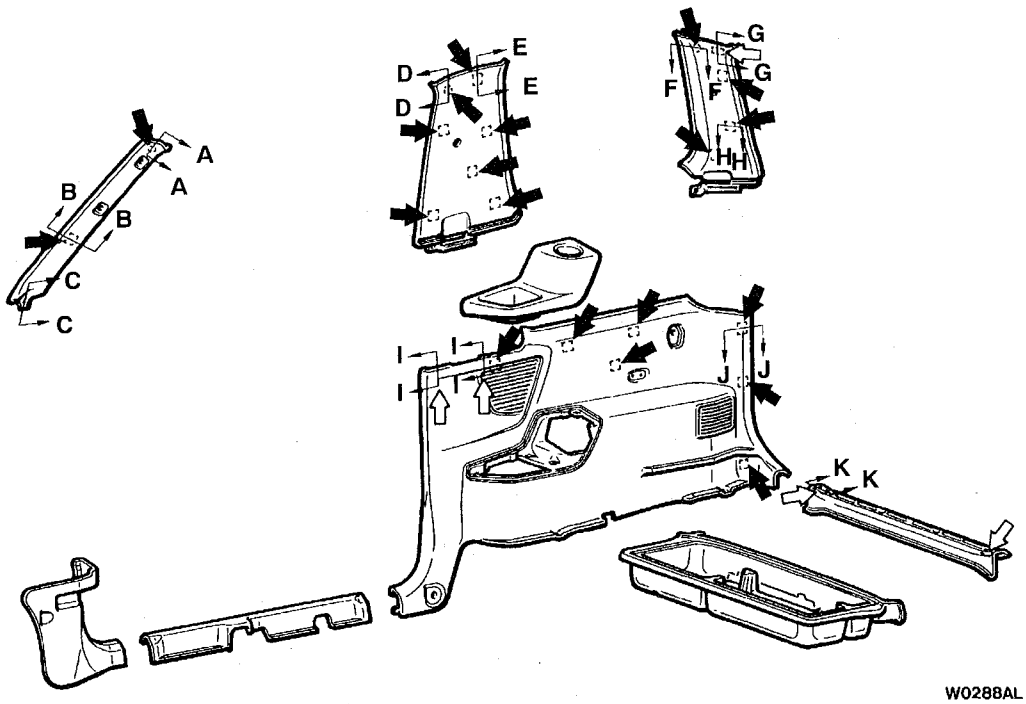

W0288AL

NOTE
- ⬅ : Clip positions
- ⇦ : Claw positions

For door trim, refer to GROUP 42.

Section A – A

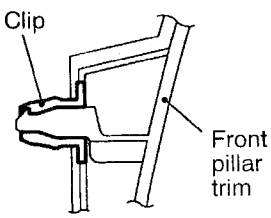

W0289AL

Section B – B

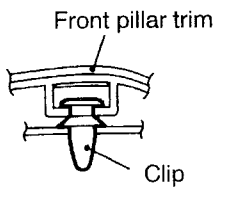

W0290AL

Section C – C

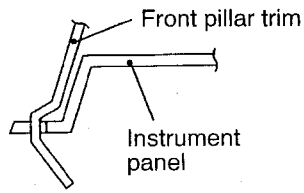

W0297AL

Section D – D

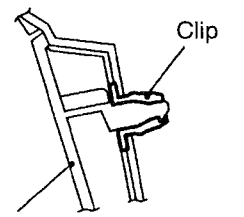

W0292AL

Section E – E

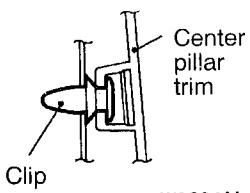

W0291AL

Section F – F

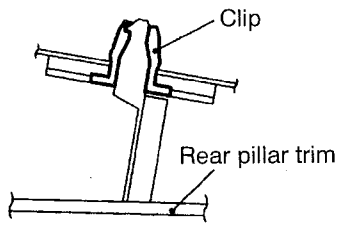

W0294AL

Section G – G

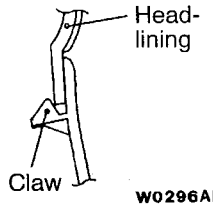

W0296AL

Section H – H

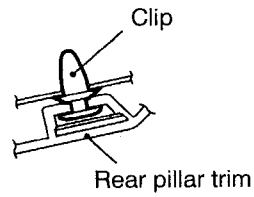

W0295AL

Section I – I

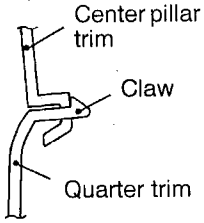

W0293AL

Section J – J

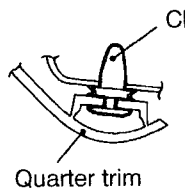

W0298AL

Section K – K

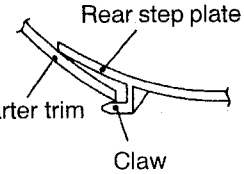

W0299AL

00008904

TRIMS <5-DOOR MODELS>

REMOVAL AND INSTALLATION

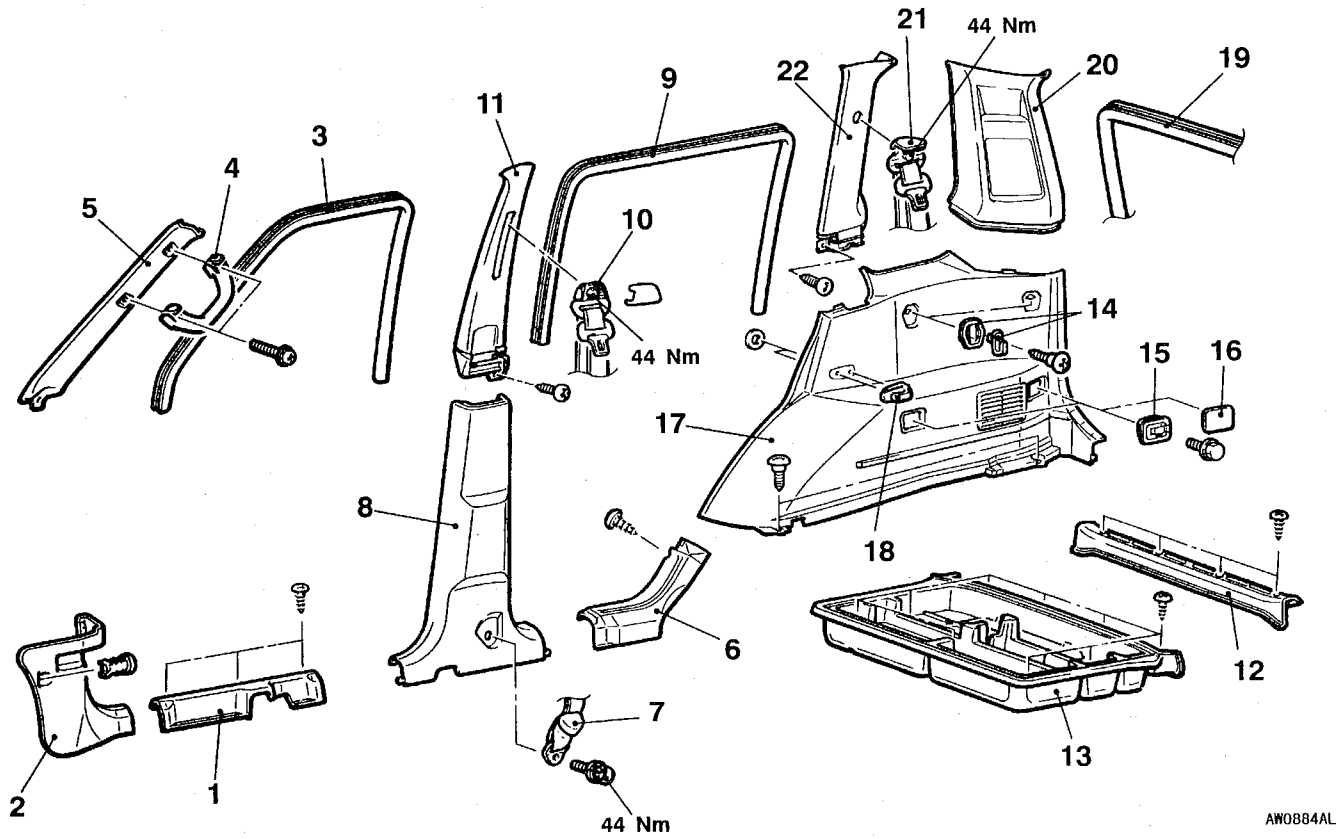

1. Front scuff plate
2. Cowl side trim
3. Front door opening trim
4. Assist grip (front)
5. Front pillar trim
6. Rear scuff plate
7. Front seat belt connection
8. Center pillar lower trim
9. Rear door opening trim
10. Front seat belt connection
11. Center pillar upper trim
12. Rear step plate
    <Vehicles for Australia and New Zealand>
- Rear seat (Refer to P.52A-22.)

13. Luggage floor box <Vehicles except for Australia and New Zealand>
14. Luggage room hook
15. Net hook
16. Cover <Vehicles except for Australia and New Zealand>
17. Quarter lower trim
18. Hook
19. Back door opening trim
20. Rear pillar trim
21. Rear seat belt connection
22. Quarter pillar upper trim

CLIP AND CLAW POSITIONS

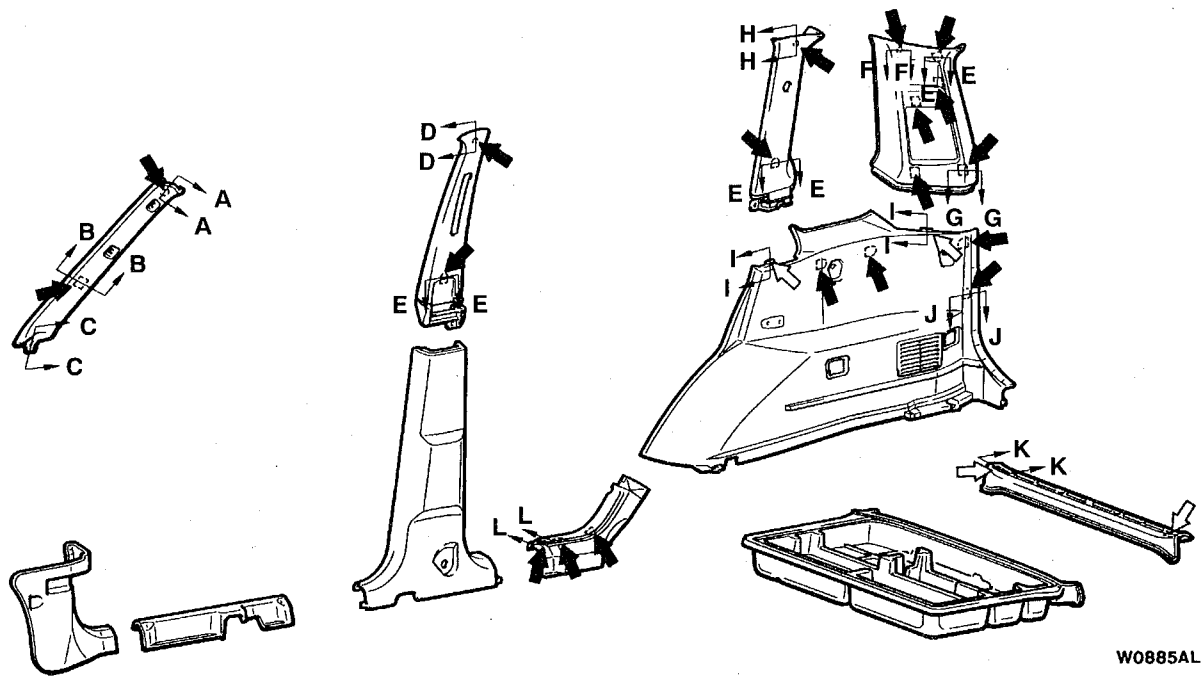

NOTE
⬅ : Clip positions
⇦ : Claw positions
For door trim, refer to GROUP 42.

00009437

Section A – A

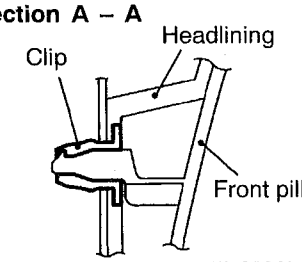

Section B – B

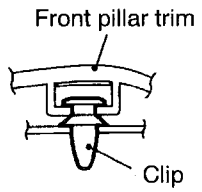

Section C – C

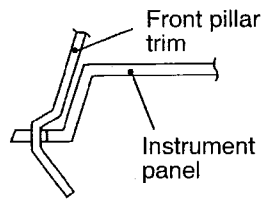

Section D – D

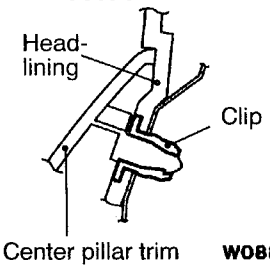

Section E – E

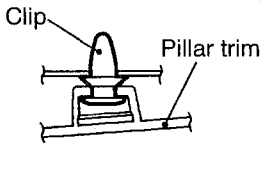

Section F – F

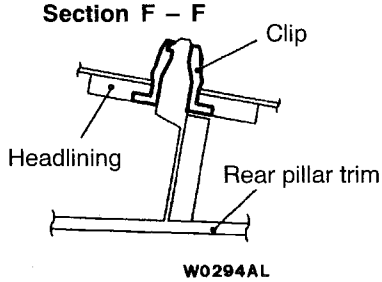

Section G – G

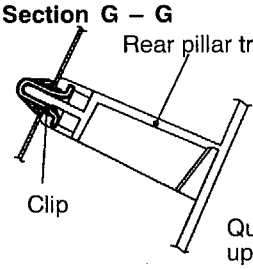

Section H – H

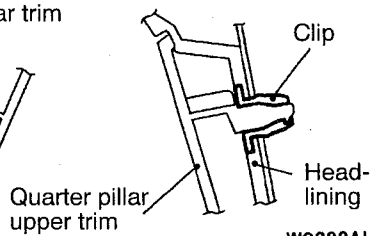

Section I – I

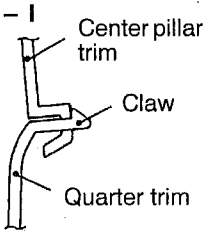

Section J – J

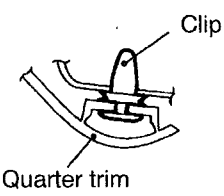

Section K – K

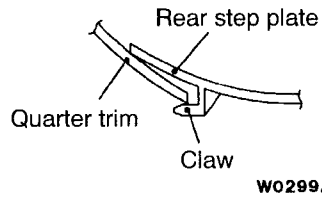

Section L – L

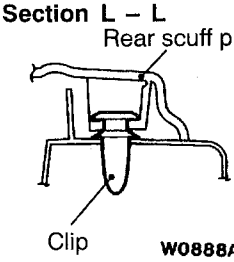

HEADLINING <3-DOOR MODELS>

REMOVAL AND INSTALLATION

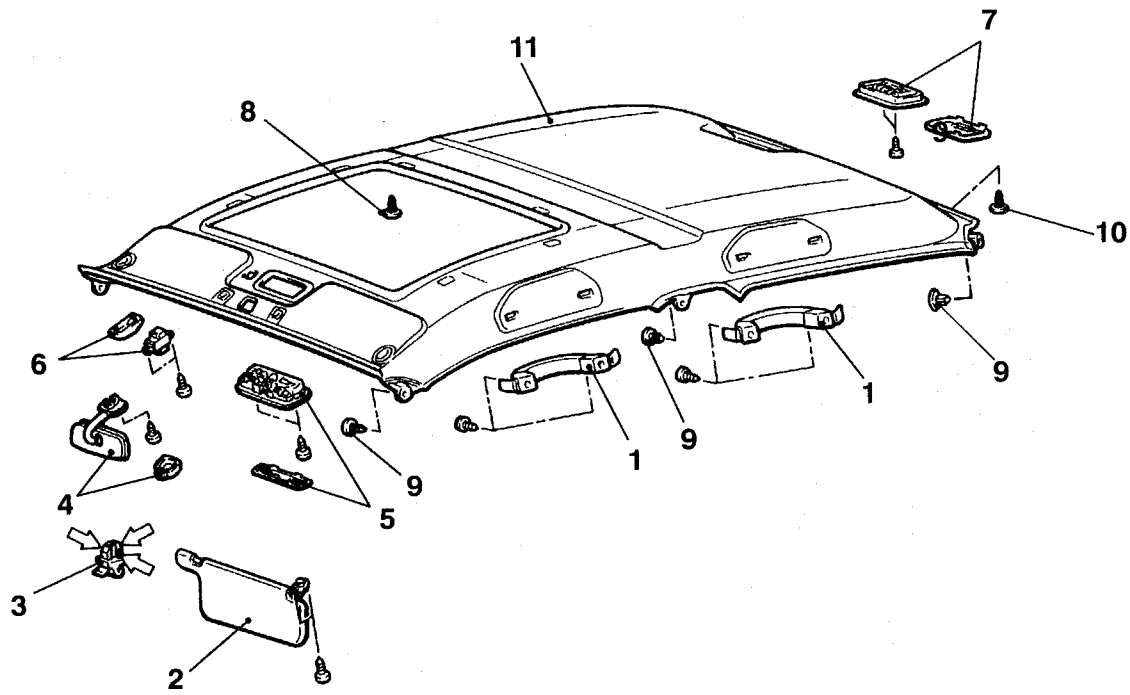

NOTE
⇦ : Claw positions

AW0462AL

Removal steps

1. Assist grip
2. Sun visor assembly
3. Sun visor holder

◀A▶

4. Room mirror
5. Front room lamp assembly
6. Sunroof switch <Vehicles with sunroof>
7. Rear room lamp assembly
- Front pillar trim (Refer to P.52A-11.)
- Centre pillar trim (Refer to P.52A-11.)
- Rear pillar trim (Refer to P.52A-11.)

8. Trim clip <Vehicles without sunroof>
9. Clip
10. Trim clip
11. Headlining

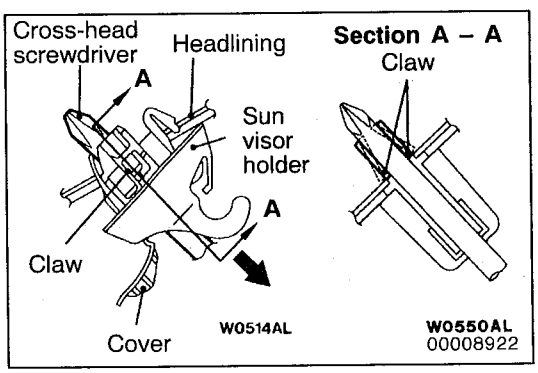

REMOVAL SERVICE POINT

◀A▶ SUN VISOR HOLDER REMOVAL

1. Remove the sun visor holder cover. Insert the cross-head screwdriver with diameter of 6 mm to disengage the claws at the side of sun visor holder.
2. Pull the sun visor holder in the direction of arrow shown in the illustration with the screwdriver still inserted, and then remove the sun visor holder.

HEADLINING <5-DOOR MODELS>

REMOVAL AND INSTALLATION

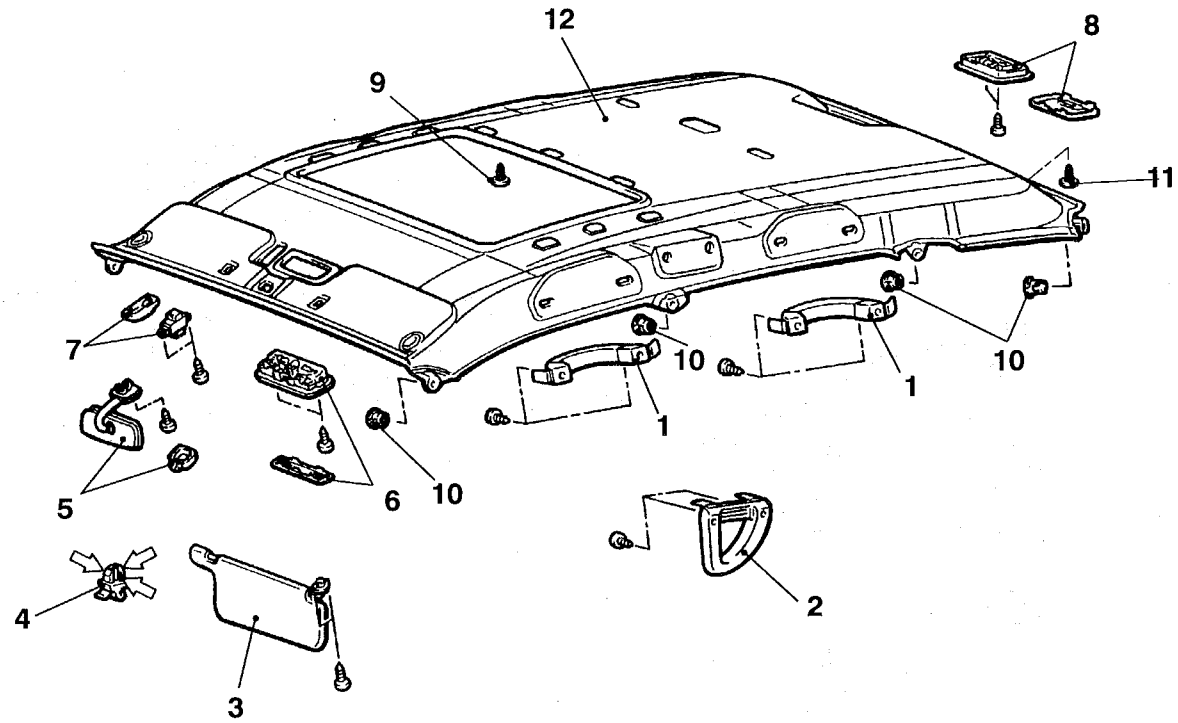

NOTE
⇦ : Claw positions

AW0889AL

1. Assist grip
2. Grip (rear)
3. Sun visor assembly
◀A▶ 4. Sun visor holder
5. Room mirror
6. Front room lamp assembly
7. Sunroof switch
<Vehicles with sunroof>
8. Rear room lamp assembly
- Front pillar trim (Refer to P.52A-13.)
- Centre pillar upper trim (Refer to P.52A-13.)
- Quarter pillar upper trim (Refer to P.52A-13.)
- Rear pillar trim (Refer to P. 52A-13.)

9. Trim clip
<Vehicles without sunroof>
10. Clip
11. Trim clip
12. Headlining

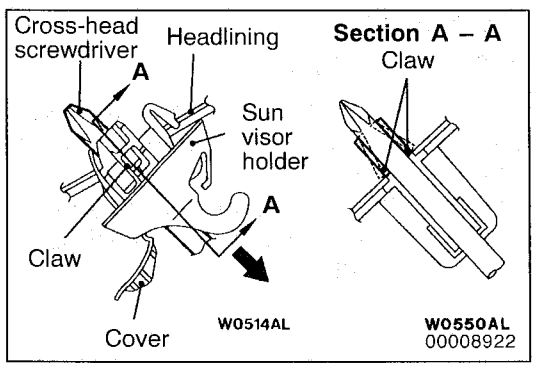

REMOVAL SERVICE POINT

◀A▶ SUN VISOR HOLDER REMOVAL

1. Remove the sun visor holder cover. Insert the cross-head screwdriver with diameter of 6 mm to disengage the claws at the side of sun visor holder.
2. Pull the sun visor holder in the direction of arrow shown in the illustration with the screwdriver still inserted, and then remove the sun visor holder.

SEAT

FRONT SEAT

REMOVAL AND INSTALLATION

Caution: SRS
Before removal of the seat equipped with the side air bag module, refer to GROUP 52B – SRS Service Precautions and Air Bag Module.

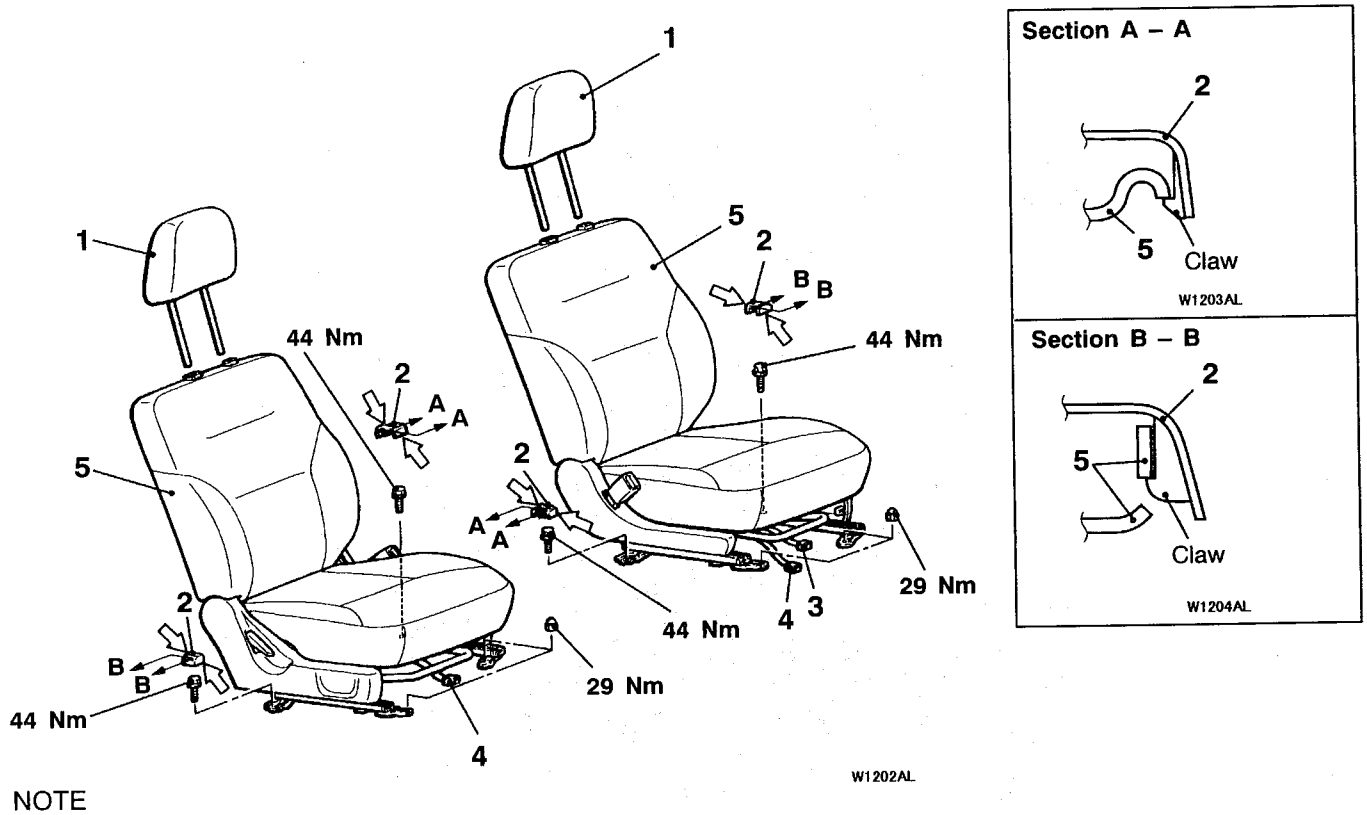

NOTE
⇦ : Claw positions

1. Headrestraint

Front seat assembly removal steps

2. Front seat anchor cover
3. Seat belt switch harness connector <Vehicles for GCC>
4. Side air bag module harness connector <Vehicles with SRS side air bag>

▶A◀ 5. Front seat assembly

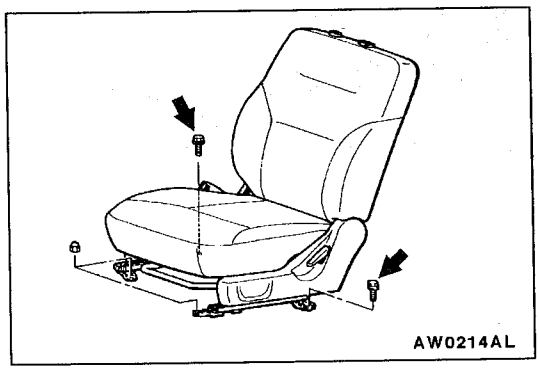

INSTALLATION SERVICE POINT

▶A◀ FRONT SEAT ASSEMBLY INSTALLATION

Temporarily tighten the mounting nuts and bolts, and then tighten them to the specified torque. Note that the bolts shown in the illustration should be tightened with no load on the seat cushion.

DISASSEMBLY AND REASSEMBLY

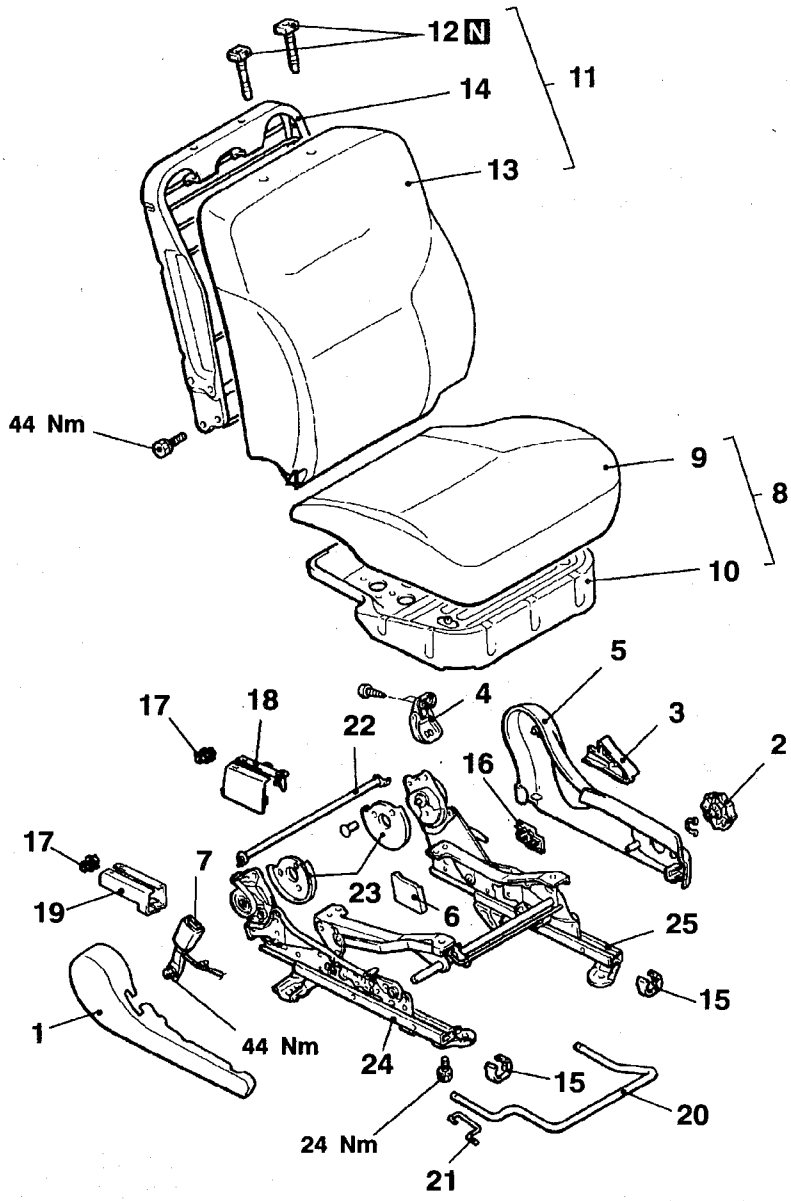

Disassembly steps

1. Front seat hinge cover
2. Height adjuster knob
3. Reclining adjuster lever
4. Slide rail flap
5. Front seat side shield cover
6. Side shield inner cover (A)
7. Inner seat belt
8. Front seat cushion assembly
9. Front seat cushion cover and pad assembly
10. Front seat cushion frame
11. Front seat back assembly
12. Headrestraint guide ◀A▶
13. Front seat back cover and pad assembly
14. Front seat back frame <Vehicles without SRS side air bag>
15. Slide adjuster cap (A)
16. Side shield inner cover (B)
17. Slide adjuster cap (B)
18. Slide adjuster cover (A)
19. Slide adjuster cover (B)
20. Slide adjuster lever
21. Pin
22. Suspension shaft
23. Reclining adjuster lower cover
24. Seat slide adjuster, inner
25. Seat slide adjuster, outer

CLAW POSITIONS

<Front seat hinge cover>

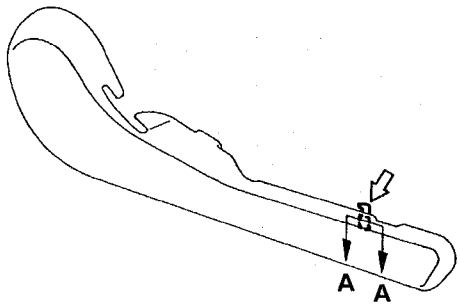

W1206AL

Section A – A

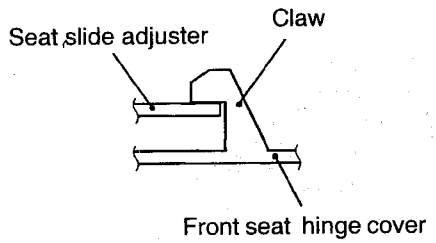

W1207AL

<Front seat side shield cover>

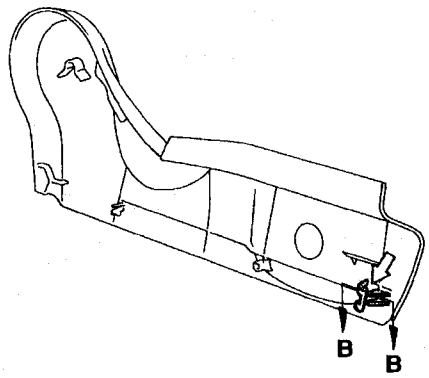

W1208AL

Section B – B

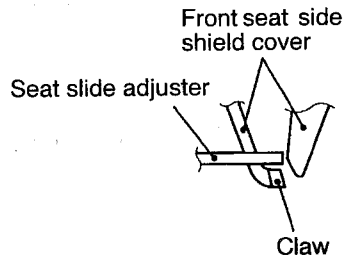

W1209AL

<Side shield inner cover (A)>

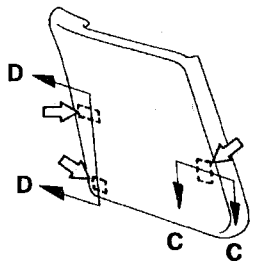

W1210AL

Section C – C

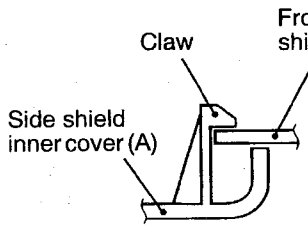

W1211AL

Section D – D

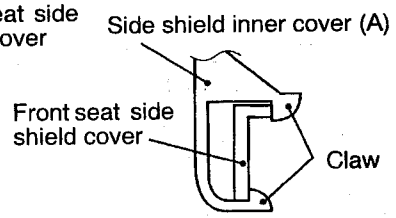

W1212AL

<Slide adjuster cap (A)>

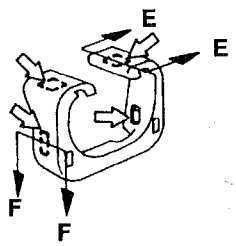

W1213AL

Section E – E

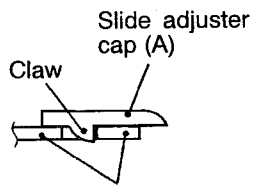

W1214AL

Section F – F

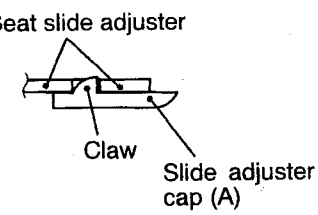

W1215AL

NOTE
⇦ : Claw positions

<Side shield inner cover (B)>

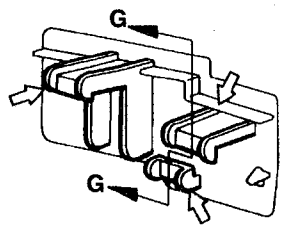

W1216AL

Section G – G

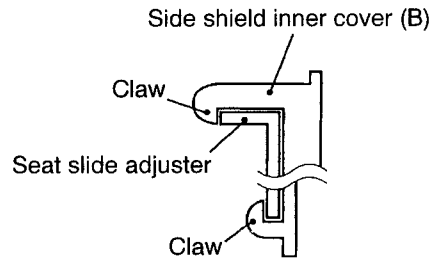

W1217AL

<Slide adjuster cap (B)>

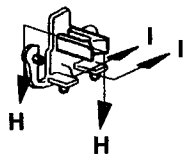

W1218AL

Section H – H

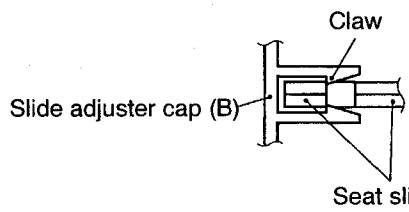

W1219AL

Section I – I

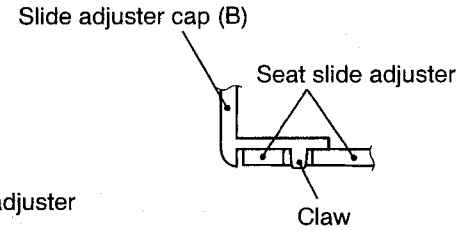

W1220AL

<Slide adjuster cover (A)>

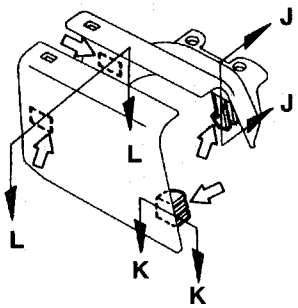

W1221AL

Section J – J

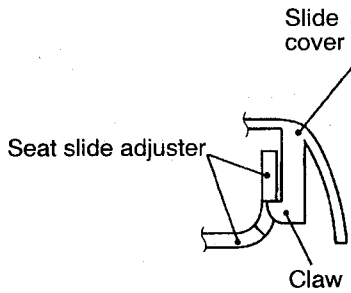

W1222AL

Section K – K

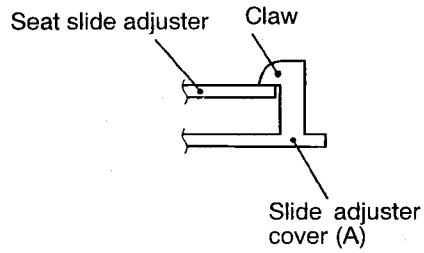

W1223AL

Section L – L

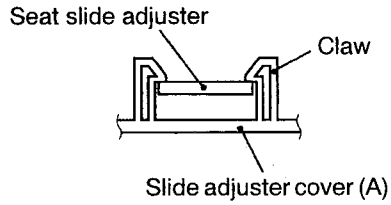

W1224AL

NOTE
⇦ : Claw positions

<Slide adjuster cover (B)>

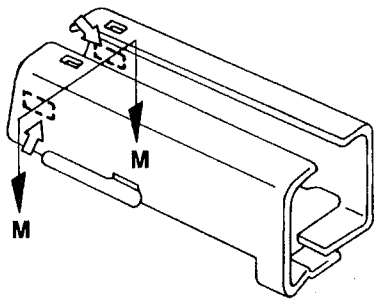

W1225AL

Section M – M

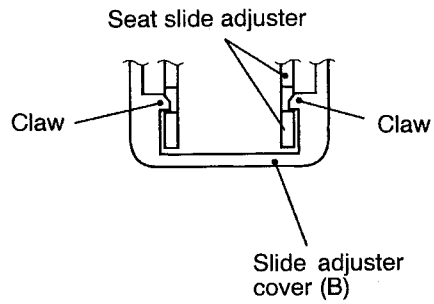

W1226AL

NOTE
⇦ : Claw positions

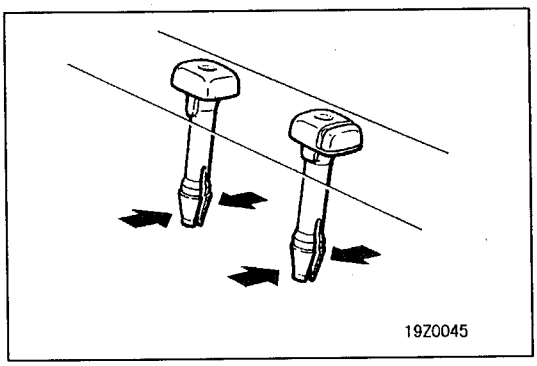

REMOVAL SERVICE POINT

◀A▶ HEADRESTRAINT GUIDE REMOVAL

REAR SEAT
REMOVAL AND INSTALLATION

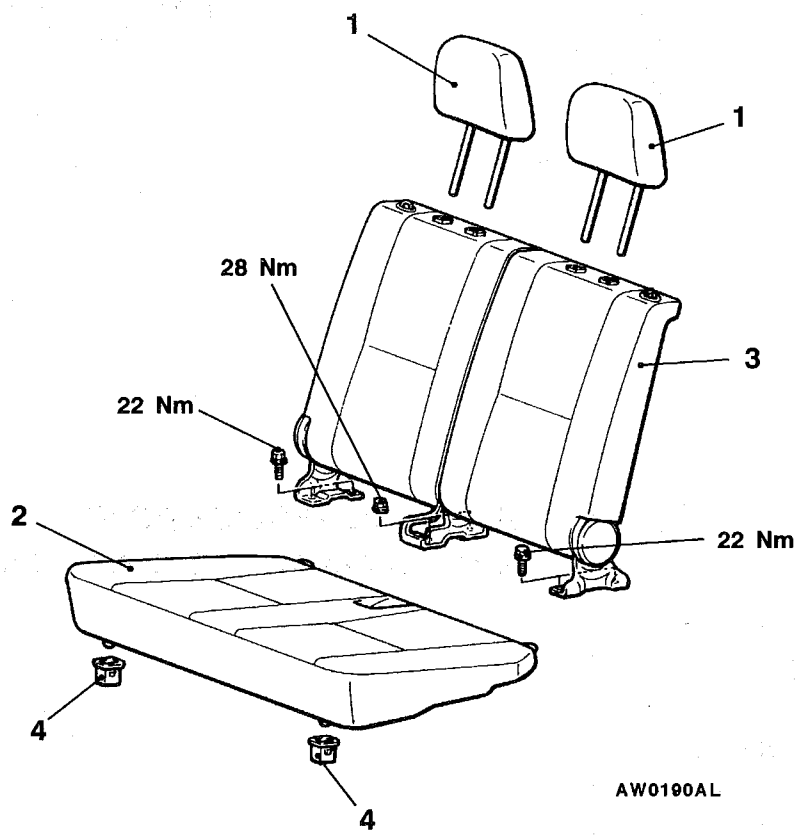

1. Headrestraint

Rear seat assembly removal steps

2. Rear seat cushion assembly
3. Rear seat back assembly
4. Rear seat stopper

DISASSEMBLY AND REASSEMBLY

<3-door models>

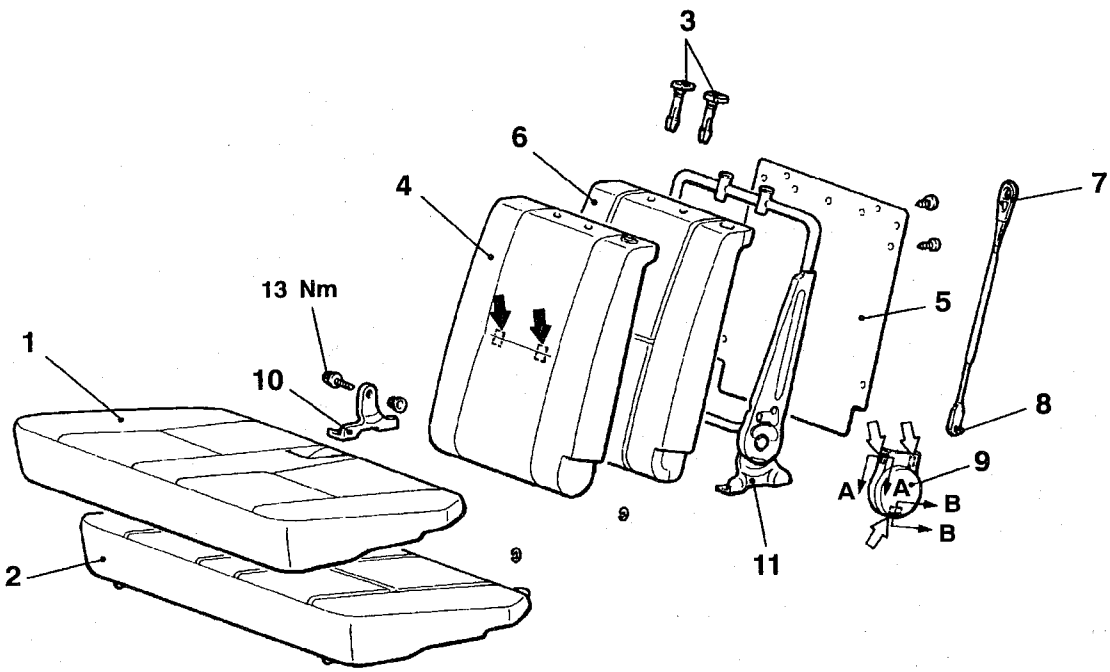

NOTE
◀ : Clip positions
⇦ : Claw positions

<Back view of rear seat cushion>

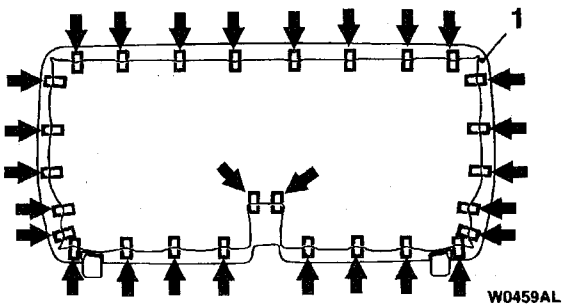

Section A – A

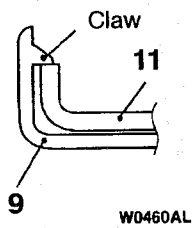

Section B – B

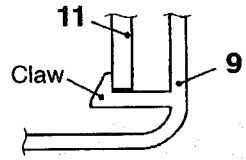

Disassembly steps

◀A▶
1. Rear seat cushion cover
2. Rear seat cushion pad
3. Headrestraint guide
4. Rear seat back cover
5. Rear seat back panel
6. Rear seat back pad
7. Folding knob connection
8. Rod clip
9. Reclining adjuster cover
10. Rear seat center hinge
11. Rear seat back frame assembly

<5-door models>

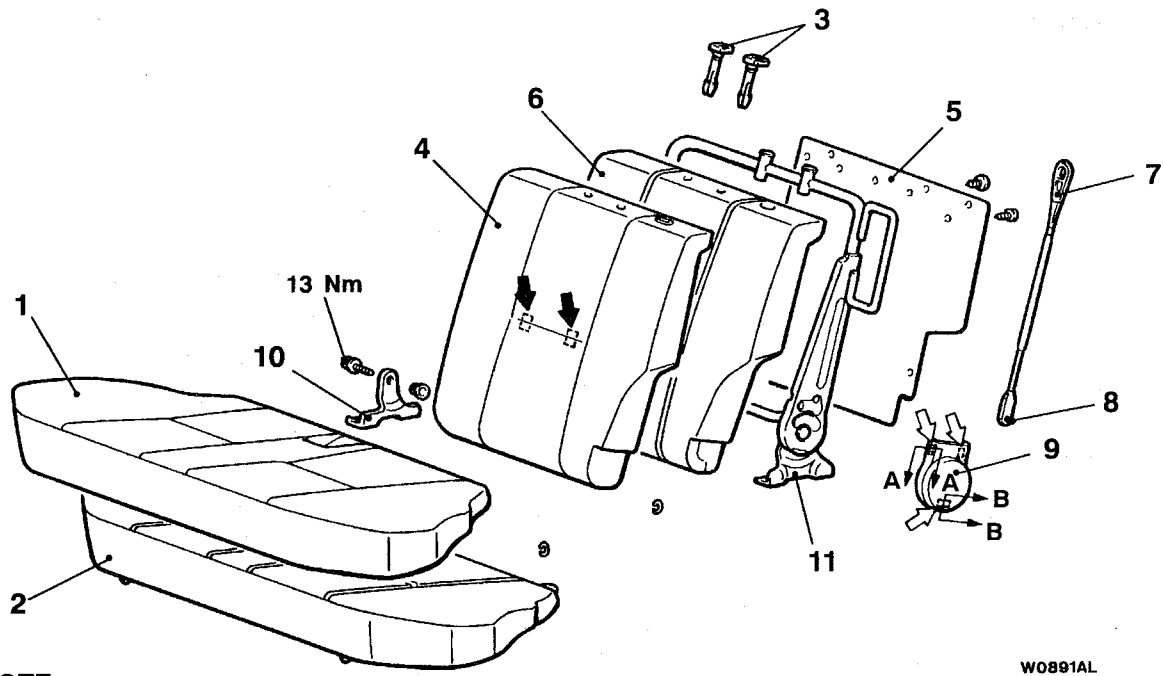

NOTE
⬅ : Clip positions
⇦ : Claw positions

00009439

<Back view of rear seat cushion>

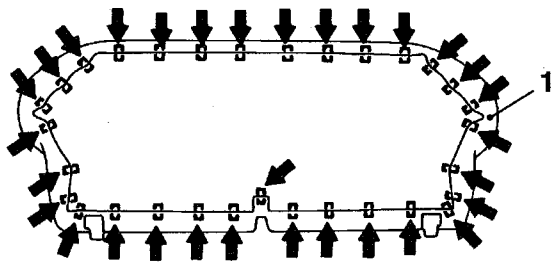

Section A – A

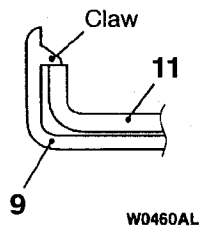

Section B – B

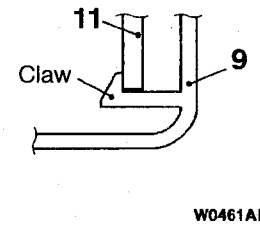

Disassembly steps

1. Rear seat cushion cover
2. Rear seat cushion pad
◀A▶ 3. Headrestraint guide
4. Rear seat back cover
5. Rear seat back panel
6. Rear seat back pad
7. Folding knob connection
8. Rod clip
9. Reclining adjuster cover
10. Rear seat center hinge
11. Rear seat back frame assembly

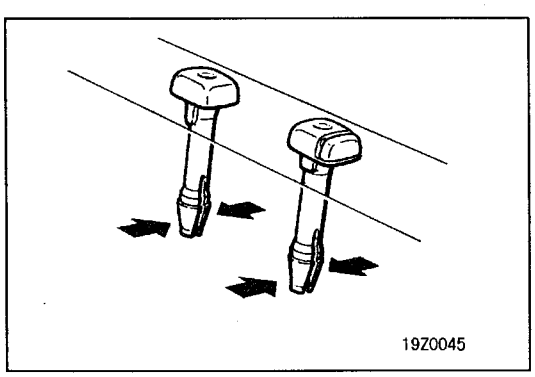

REMOVAL SERVICE POINT

◀A▶ HEADRESTRAINT GUIDE REMOVAL

SEAT BELT

FRONT SEAT BELT
REMOVAL AND INSTALLATION
<3-door models>

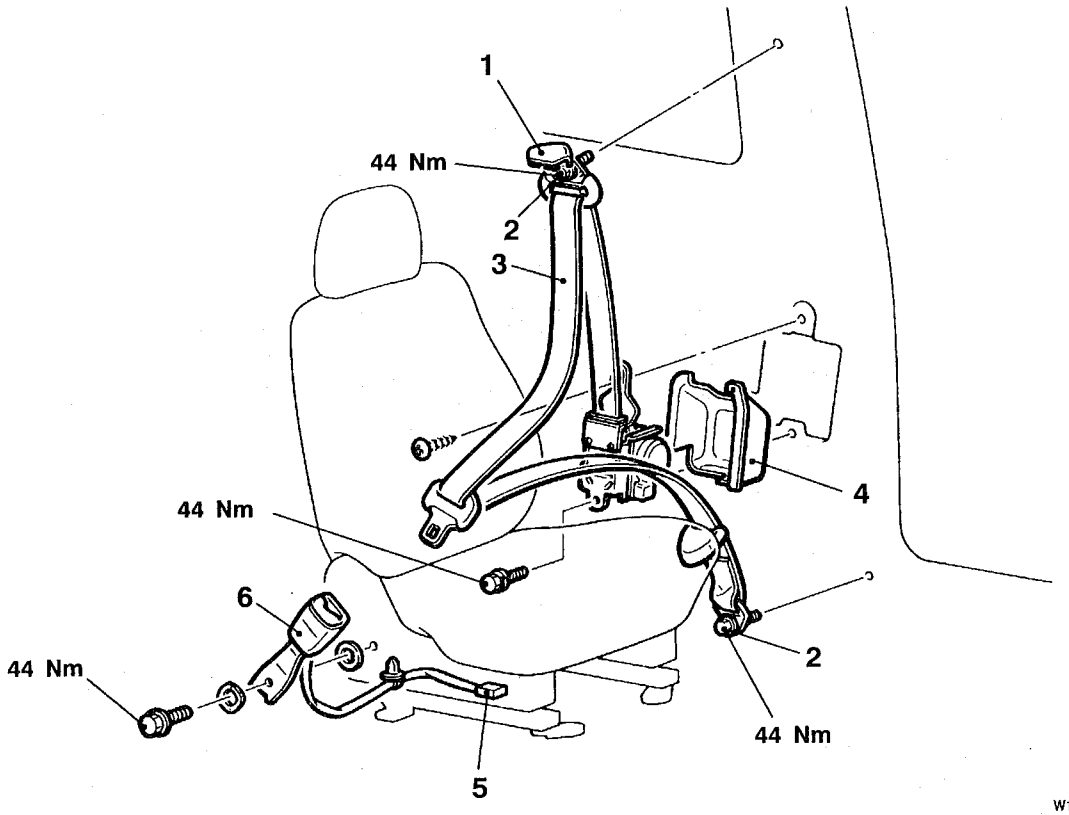

Outer seat belt removal steps

1. Sash guide cover
2. Outer seat belt connection
- Center pillar trim (Refer to P.52A-11.)
- Quarter trim (Refer to P.52A-11.)

3. Outer seat belt
4. Front noise protector

Inner seat belt removal steps

5. Seat belt switch harness connector <Vehicles for GCC>
- Front seat hinge cover (Refer to P.52A-18.)

6. Inner seat belt

<5-door models>

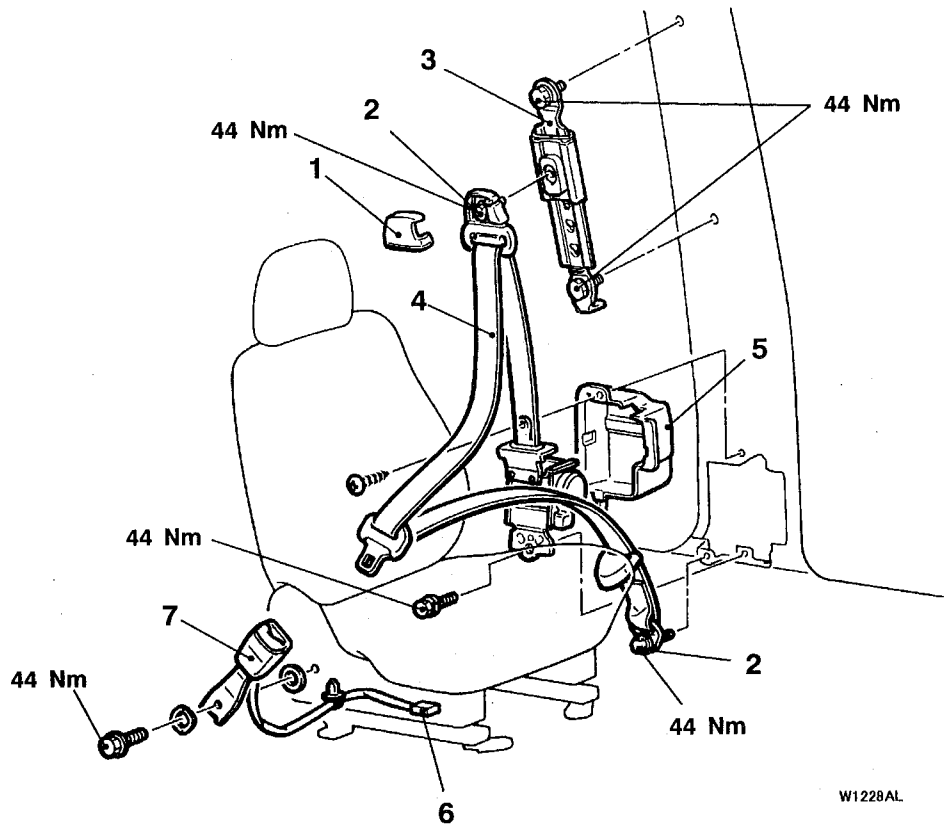

Outer seat belt removal steps

1. Sash guide cover
2. Outer seat belt connection
   - Center pillar lower trim (Refer to P.52A-13.)
   - Center pillar upper trim (Refer to P.52A-13.)
3. Adjustable seat belt anchor
4. Outer seat belt
5. Front noise protector

Inner seat belt removal steps

6. Seat belt switch harness connector <Vehicles for GCC>
   - Front seat hinge cover (Refer to P.52A-18.)
7. Inner seat belt

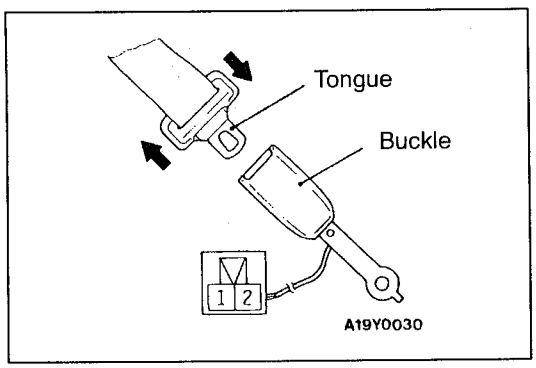

INSPECTION

SEAT BELT SWITCH CONTINUITY CHECK <Vehicles for GCC>

If there is no continuity, replace the inner seat belt.

Items	Terminal No.	
	1	2
When tongue is inserted		
When tongue is not inserted	○	○

REAR SEAT BELT
REMOVAL AND INSTALLATION
<3-door models>

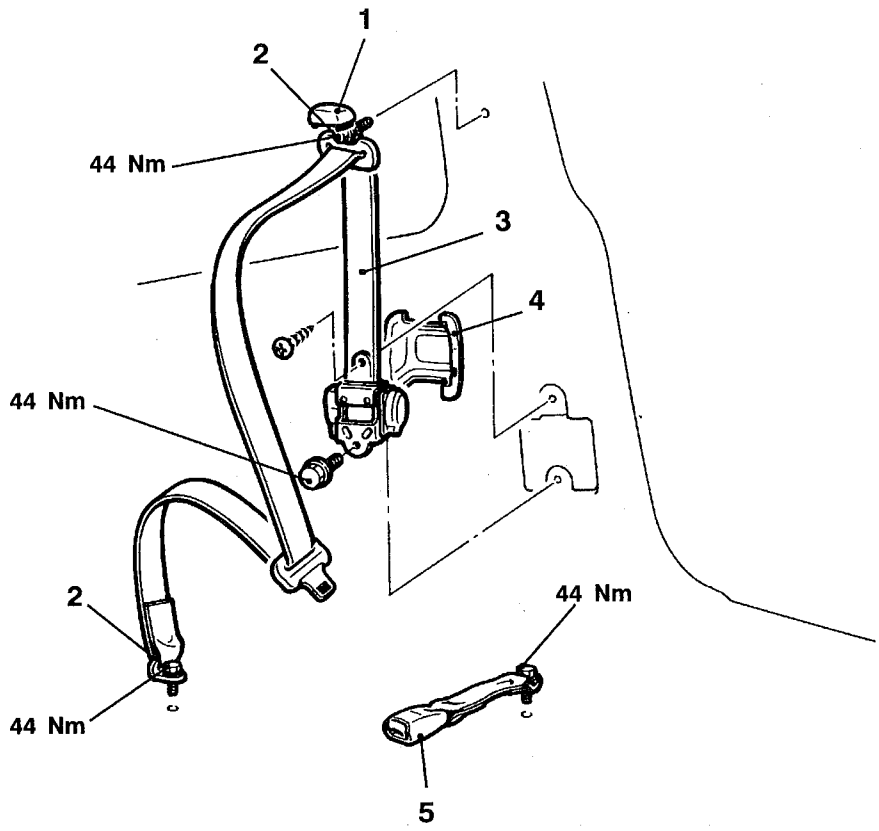

Removal steps

- Rear seat cushion assembly (Refer to P.52A-22.)
1. Sash guide cover
2. Outer seat belt connection
- Luggage floor box <Vehicles except for Australia and New Zealand> (Refer to P.52A-11.)
- Rear pillar trim (Refer to P.52A-11.)
- Quarter trim (Refer to P.52A-11.)
3. Outer seat belt
4. Rear noise protector
5. Inner seat belt

<5-door models>

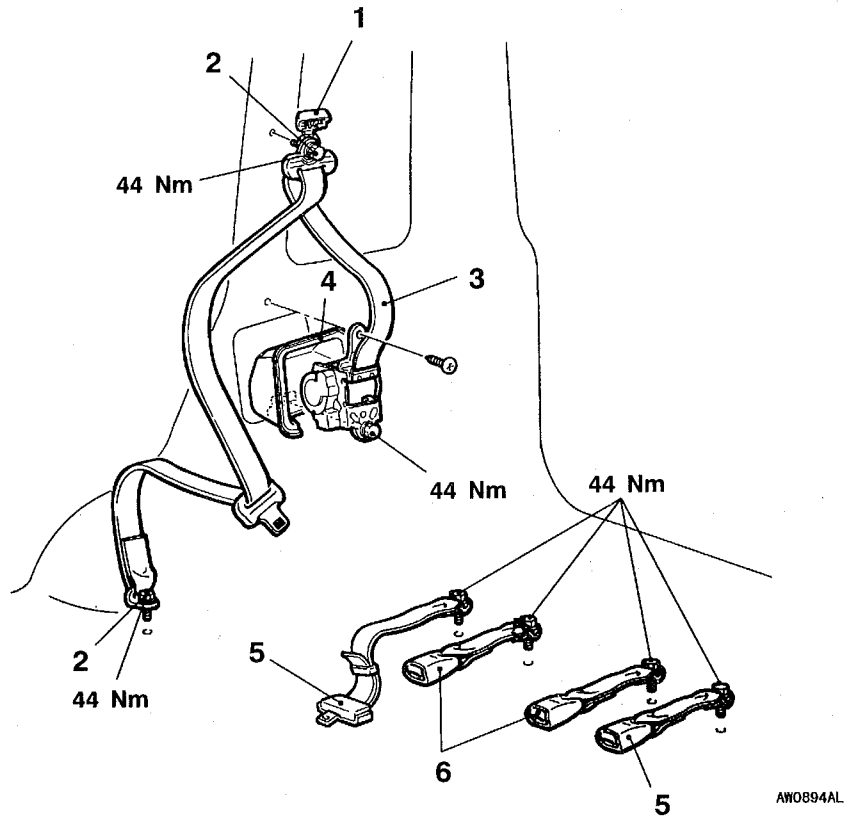

Removal steps

- Rear seat cushion assembly (Refer to P.52A-22.)
1. Sash guide cover
2. Outer seat belt connection
- Luggage floor box <Vehicles except for Australia and New Zealand> (Refer to P.52A-13.)
- Quarter lower trim (Refer to P.52A-13.)
- Quarter pillar upper trim (Refer to P.52A-13.)
3. Outer seat belt
4. Rear noise protector
5. Rear center seat belt
6. Inner seat belt

SUPPLEMENTAL RESTRAINT SYSTEM (SRS)

CONTENTS

GENERAL INFORMATION 2

SRS SERVICE PRECAUTIONS 4

SPECIAL TOOLS 6

TEST EQUIPMENT 7

TROUBLESHOOTING 7

POST-COLLISION DIAGNOSIS 18

INDIVIDUAL COMPONENT SERVICE 21

WARNING/CAUTION LABELS 22

SRS AIR BAG CONTROL UNIT (SRS-ECU) 23

AIR BAG MODULES AND CLOCK SPRING 25

SIDE IMPACT SENSOR 33

AIR BAG MODULE PROCEDURES 35

- Undeployed Air Bag Module Disposal 35
- Deployed Air Bag Module Disposal Procedures 44

CAUTION

- **Carefully read and observe the information in the SERVICE PRECAUTIONS (P.52B-4.) prior to any service.**
- **For information concerning troubleshooting or maintenance, always observe the procedures in the Troubleshooting (P.52B-7.) section.**
- **If any SRS components are removed or replaced in connection with any service procedures, be sure to follow the procedures in the INDIVIDUAL COMPONENT SERVICE section (P.52B-21.) for the components involved.**
- **If you have any questions about the SRS, please contact your local distributor.**

GENERAL INFORMATION

To improve safety, the SRS is available as optional parts. This system enhances collision safety by restraining the front passengers in case of an accident.

The SRS consists of four air bag modules, SRS air bag control unit (SRS-ECU), side impact sensors, SRS warning lamp and clock spring. The air bags are located in the centre of the steering wheel, above the glove box, and built into the front seat back assemblies. Each air bag has a folded air bag and an inflator unit. The SRS-ECU under the floor console monitors the system and has a safing G-sensor and an analog G-sensor. The side impact sensors inside the center pillars or the quarter panels, inner monitor any shocks coming from the side of the vehicle. The warning lamp on the instrument panel indicates the operational status of the SRS. The clock spring is installed in the steering column.

The SRS side air bags deploy if an impact received at the side of the vehicle is stronger than a certain set value, in order to protect the front seat occupant's torso in the event of a collision. Only authorized service personnel should do work on or around the SRS components. Those service personnel should read this manual carefully before starting any such work. Extreme care must be used when servicing the SRS to avoid injury to the service personnel (by inadvertent deployment of the air bags) or the driver (by rendering the SRS inoperative).

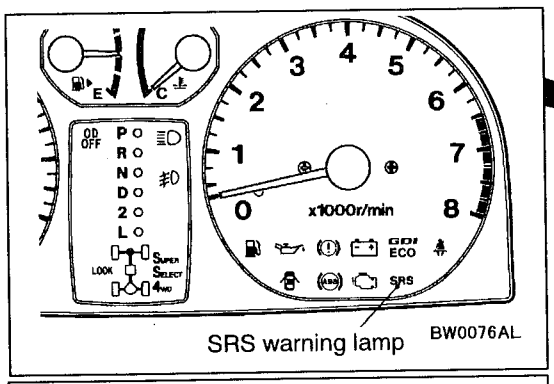

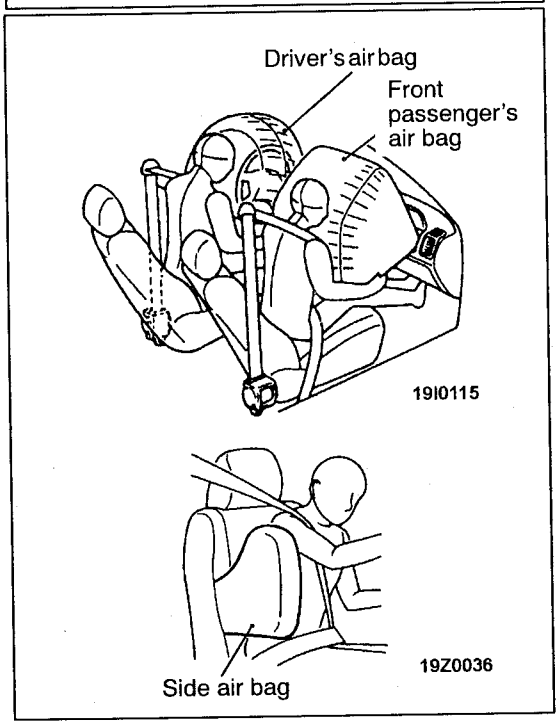

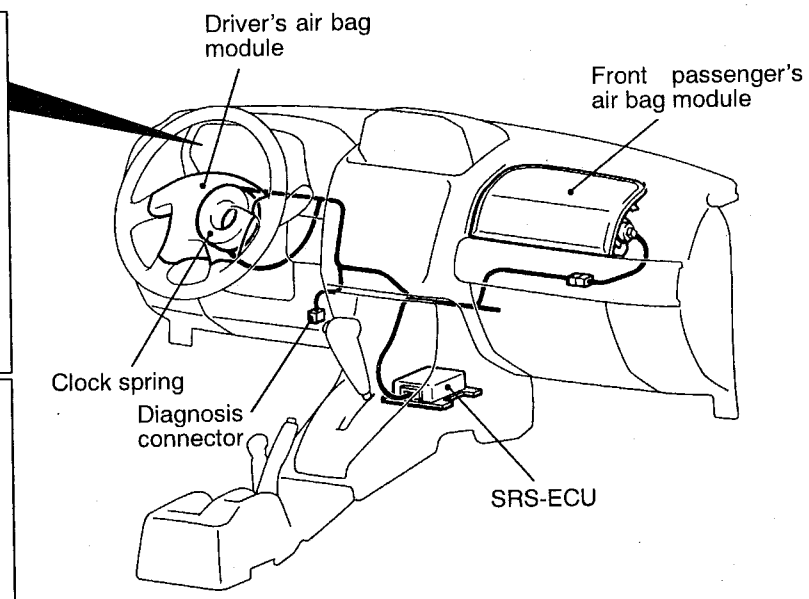

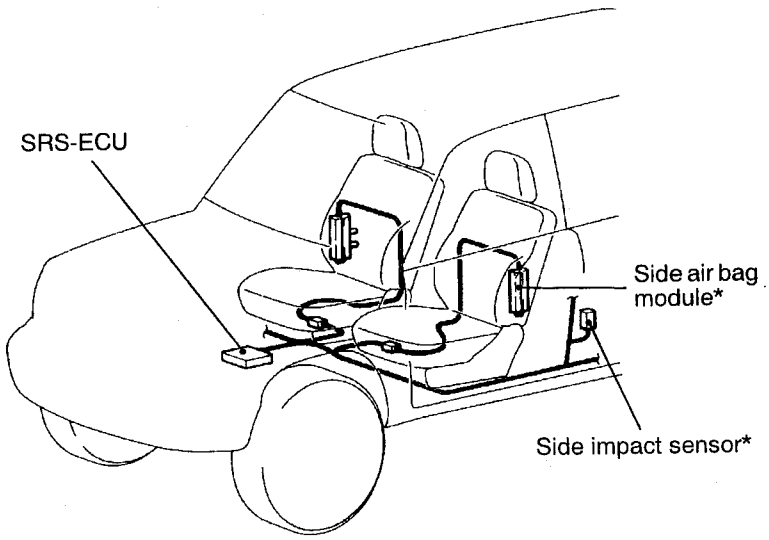

NOTE
*: Indicates the parts equipped on the right and left sides.

SRS SERVICE PRECAUTIONS

1. In order to avoid injury to yourself or others from accidental deployment of the air bag during servicing, read and carefully follow all the precautions and procedures described in this manual.
2. Do not use any electrical test equipment on or near SRS components, except those specified on P.52B-7.
3. **Never Attempt to Repair the Following Components:**
   - SRS air bag control unit (SRS-ECU)
   - Clock spring
   - Driver's and front passenger's air bag modules
   - Side air bag modules
   - Side impact sensors

   NOTE
   If any of these components are diagnosed as faulty, they should only be replaced, in accordance with the INDIVIDUAL COMPONENTS SERVICE procedures in this manual. (Refer to P.52B-21.)

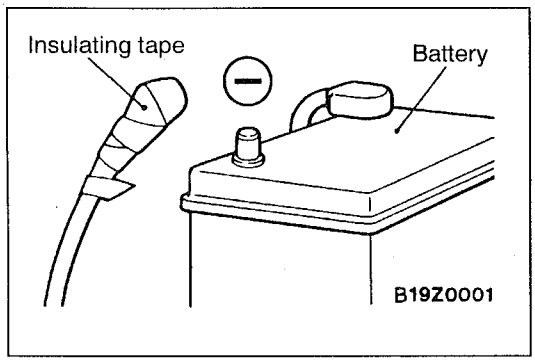

4. **After disconnecting the negative (–) battery cable, wait 60 seconds at least before any service and insulate the disconnected cable with tape. The SRS retain enough voltage to deploy the air bags for a short time even after the disconnection of the battery. So, serious injury may result by accidental air bag deployment if a work is done on the SRS just after the disconnection of the battery.**

SRS-ECU connector

<Vehicles without SRS side air bag>

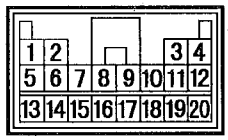

W0997AL

<Vehicles with SRS side air bag>

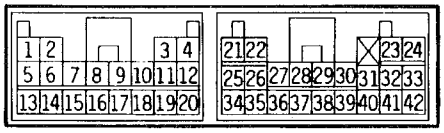

W0582AU

5. Do not attempt to repair the wiring harness connectors of the SRS. If the connector(s) are diagnosed as defective, replace the wiring harness(es). If the harness(es) are diagnosed as faulty, replace or repair the wiring harness(es) according to the table that follows.

SRS-ECU Terminal No.	Destination of harness	Corrective action
7	Instrument panel wiring harness → Earth	Repair or replace each wiring harness
8	Instrument panel wiring harness → Combination meter (SRS warning lamp)	
9, 10	Instrument panel wiring harness → Front passenger's air bag module	
11, 12	Instrument panel wiring harness → Clock spring → Driver's air bag module)	Repair or replace the dash wiring harness. Replace clock spring.
13	Instrument panel wiring harness → Junction block (fuse No.8)	Repair or replace each wiring harness.
16	Instrument panel wiring harness → Junction block (fuse No.6)	
20	Instrument panel wiring harness → Diagnosis connector	
21, 22	Side air bag wiring harness → Side air bag module (L.H.)	
23, 24	Side air bag wiring harness → Side air bag module (R.H.)	
34, 36	Side air bag wiring harness → Side impact sensor (L.H.)	
40, 42	Side air bag wiring harness → Side impact sensor (R.H.)	

6. Inspection of the SRS-ECU harness connector should be carried out by the following procedure. Insert the special tool (probe, MB991222, in the harness set) into the connector from harness side (rear side), and connect the tester to this probe. If any tool than specified is used, damage to the harness and other components will result. Furthermore, measurement should not be carried out by touching the probe directly against the terminals from the front of the connector. The terminals are plated to increase their conductivity, so that if they are touched directly by the probe, the plating may break, which will cause drops in reliability.

<Vehicles without SRS side air bag>

SRS-ECU harness connector

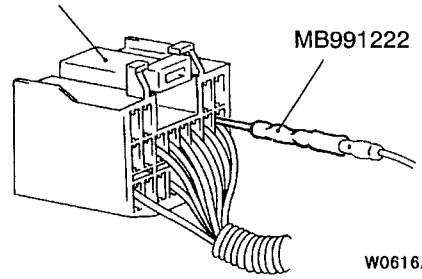

W0616AL

SRS-ECU harness connector (rear view)

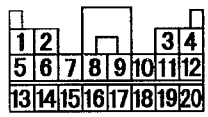

W0999AL

<Vehicles with SRS side air bag>

SRS-ECU harness connector

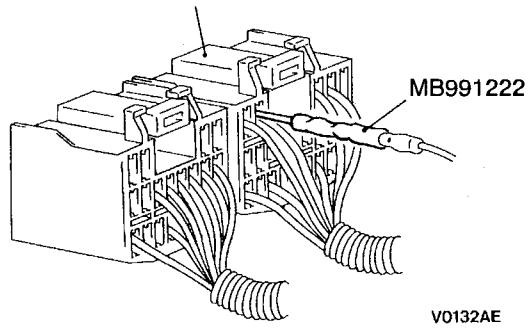

V0132AE

SRS-ECU harness connector (rear view)

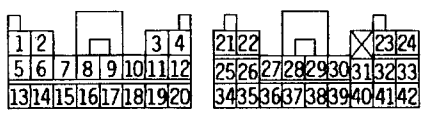

W0584AU

7. SRS components should not be subjected to temperature over 93°C, so remove the SRS-ECU, driver's and front passenger's air bag modules, clock spring, side impact sensors and front seat assemblies (side air bag modules) before drying or baking the vehicle after painting.
8. Whenever you finish servicing the SRS, check warning lamp operation to make sure that the system functions properly. (Refer to P.52B-7.)
9. Make certain that the ignition switch is LOCK (OFF) position when the MUT-II is connected or disconnected.
10. If you have any questions about the SRS, please contact your local distributor.

NOTE
SERIOUS INJURY CAN RESULT FROM UNINTENDED AIR BAG DEPLOYMENT, SO USE ONLY THE PROCEDURES AND EQUIPMENT SPECIFIED IN THIS MANUAL.

SPECIAL TOOLS

Tool	Number	Name	Use
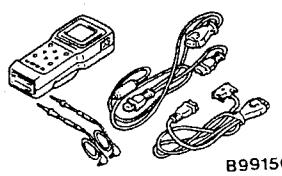 B991502	MB991502	MUT-II sub assembly	• Reading and erasing diagnosis codes • Reading trouble period • Reading erase times
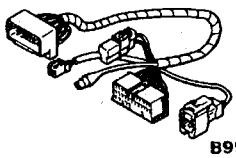 B991613	MB991613	SRS check harness	Checking SRS electrical circuitry
A 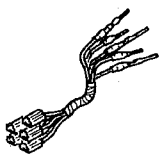 B 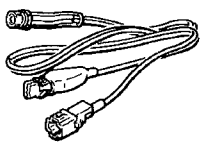 C 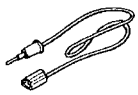 D  C991223	MB991223 A: MB991219 B: MB991220 C: MB991221 D: MB991222	Harness set A: Check harness B: LED harness C: LED harness adapter D: Probe	Checking continuity and measuring voltage at SRS-ECU harness connector
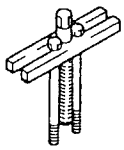 B990803	MB990803	Steering wheel puller	Removing steering wheel
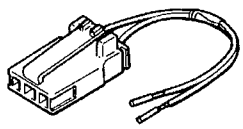 R372530	MR372530	SRS air bag adapter harness	Deploying driver's air bag module inside vehicle

Tool	Number	Name	Use
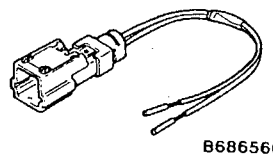 B686560	MB686560	SRS air bag adapter harness	Deploying front passenger's air bag module and side air bag modules inside or outside vehicle

TEST EQUIPMENT

Tool	Name	Use
 13R0746	Digital multi-meter	Checking SRS electrical circuitry Use multi-meter for which the maximum test current is 2 mA or less at minimum range of resistance measurement

TROUBLESHOOTING

STANDARD FLOW OF DIAGNOSTIC TROUBLESHOOTING

Refer to GROUP 00 – How to Use Troubleshooting/Inspection Service Points.

DIAGNOSIS FUNCTION

DIAGNOSIS CODES CHECK

Connect the MUT-II to the diagnosis connector (16-pin) under the instrument under cover, then check diagnosis codes.
(Refer to GROUP 00 – How to Use Troubleshooting/Inspection Service Points.)

ERASING DIAGNOSIS CODE

Connect the MUT-II to the diagnosis connector and erase the diagnosis code.

Caution
Turn off the ignition switch before connecting or disconnecting the MUT-II.

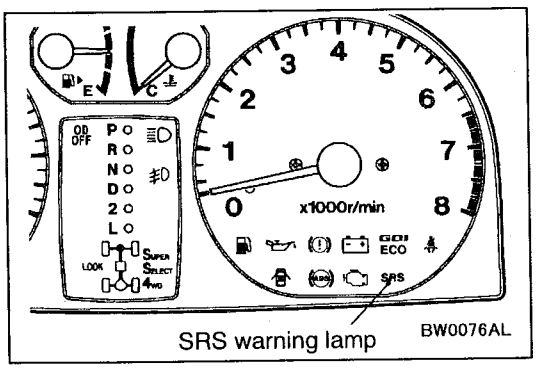

SRS WARNING LAMP CHECK

1. Check that the SRS warning lamp comes on when the ignition switch is turned ON.
2. Check that the SRS warning lamp illuminates for about 7 seconds and then goes out.
3. If this is not the cause, check the diagnosis codes.

INSPECTION CHART FOR DIAGNOSIS CODES

Inspect according to the inspection chart that is appropriate for the malfunction code.

Code No.	Diagnosis item		Reference Page
14	Analog G-sensor system in the SRS-ECU		52B-9
15,16	Front impact safing G-sensor system inside SRS-ECU		52B-9
17	Side impact safing G-sensor system inside SRS-ECU		52B-9
21*1, 22*2, 61*3, 62*3	Driver's air bag module (squib) system		52B-10
24*2, 25*2, 64*3, 65*3	Front passenger's air bag module (squib) system		52B-11
31, 32	SRS-ECU capacitor system		52B-9
34*1	Connector lock system		52B-12
35	SRS-ECU (deployed air bag) system		52B-12
41*1	Power circuit system (fuse No.6 circuit)		52B-12
42*1	Power circuit system (fuse No.8 circuit)		52B-12
43	SRS warning lamp drive circuit system	Lamp does not illuminate.*	52B-13
		Lamp does not go out off.	52B-13
44*1	SRS warning lamp drive circuit system		52B-13
45	Internal circuit system of non-volatile memory (EEPROM) inside SRS-ECU		52B-9
51, 52	Driver's air bag module (squib ignition drive circuit) system		52B-9
54, 55	Front passenger's air bag module (squib ignition drive circuit) system		52B-9
71*2, 72*2, 75, 76	Side air bag module (R.H.) (squib) system		52B-14
73, 74	Side air bag module (R.H.) (squib ignition drive circuit) system		52B-9
81*2, 82*2, 85, 86	Side air bag module (L.H.) (squib) system		52B-14
83, 84	Side air bag module (L.H.) (squib ignition drive circuit) system		52B-9
91*1	Side impact sensor (L.H.) power supply circuit system		52B-15
92	Side impact sensor (L.H.) system		52B-15
93	Side impact sensor (L.H.) communication system		52B-16
94*1	Side impact sensor (R.H.) power supply circuit system		52B-16
95	Side impact sensor (R.H.) system		52B-15
96	Side impact sensor (R.H.) communication system		52B-16

NOTE
(1) *1: If the trouble(s) are extinguished, the SRS warning lamp will go out with diagnosis code history automatically erased.
(2) *2: If the trouble(s) are extinguished, the SRS warning lamp go out with diagnosis code history stored.
(3) *3: If the trouble(s) are extinguished, the SRS warning lamp go out with diagnosis code history stored.
<Vehicle without SRS side air bag>
(4) When the battery has been discharged, diagnosis code Nos.41 or 42 is stored. Check the battery when either of these is displayed.

INSPECTION PROCEDURE CLASSIFIED BY DIAGNOSIS CODE

Code Nos.14, 15, 16, 17, 31, 32, 45, 51, 52, 54, 55, 73, 74, 83, 84 System inside SRS-ECU	**Probable cause**
Malfunction is present inside SRS-ECU. See table below for what each code tells.	• Malfunction of SRS-ECU

Code No.	Defective parts	Trouble
14	Front impact analog G-sensor	• Not operating • Having characteristics abnormal • Having output abnormal
15	Front impact safing G-sensor	• Short in the circuit
16		• Open in the circuit
17	Side impact safing G-sensor	• Not operating • Having characteristics abnormal • Having output abnormal
31	DC-DC converter	• Terminal voltage of the converter higher than specified for five seconds or more
32		• Terminal voltage of the converter lower than specified for five seconds or more (this code is not detected when code No.41 or 42, which indicate discharged battery, have been detected)
45	Non-volatile memory (EEPROM)	• Having defective parts inside
51	Driver's air bag module (squib) ignition drive circuit	• Short in the circuit
52		• Open in the circuit
54	Front passenger's air bag module (squib) ignition drive circuit	• Short in the circuit
55		• Open in the circuit
73	Side air bag module (R.H.) (squib) ignition drive circuit	• Short in the circuit
74		• Open in the circuit
83	Side air bag module (L.H.) (squib) ignition drive circuit	• Short in the circuit
84		• Open in the circuit

Replace SRS-ECU.

Code Nos.21, 22, 61, 62 Driver's air bag module (squib) system	Probable cause
Abnormal resistance is present between input terminals of driver's air bag module (squib). See table below for what each code tells. However, once trouble is extinguished, SRS-warning lamp will go out. (Diagnosis code will remain stored)	• Malfunction of clock spring • Partially open as clock spring is not in neutral position • Defective wiring harnesses or connectors • Malfunction of driver's air bag module (squib) • Malfunction of SRS-ECU

Code number	Trouble
21	• Short in driver's air bag module (squib) or short harness • Short in clock spring • Defective connector*
22	• Open in driver's side air bag module (squib) or open harness • Open in clock spring • Disconnected driver's air bag module (squib) connector • Partially open as clock spring is not in neutral position • Poor connector contact*
61	• Driver's air bag module (squib) harness shorted to power supply
62	• Driver's air bag module (squib) harness shorted to earth

NOTE
*: The shorting bars, which short positive (+) and negative (–) wires to prevent the air bags from accidental deployment during the disconnection of the connector, are set in the squib circuit connectors. In a defective connector, the short-bar may be still working even after the connection of the connector.

Check clock spring. (Refer to P.52B-31.)
NG → **Replace**
NO

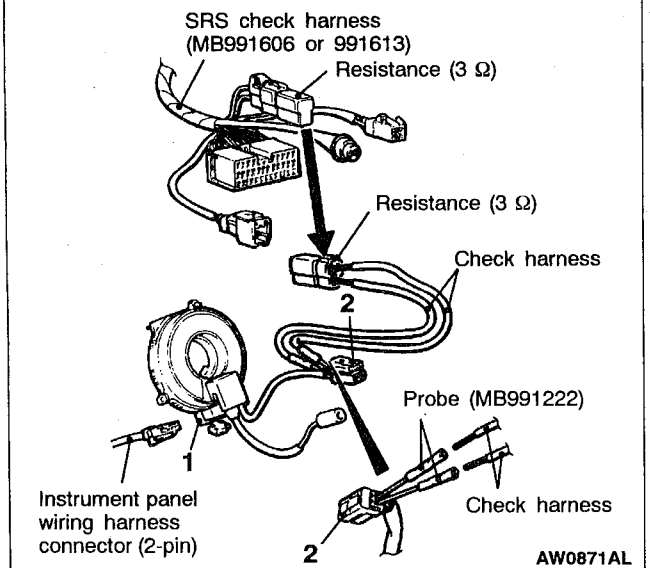

MUT-II Self-diag code
- Connect clock spring connector No.1 C-55 and the harness side connector (2-pin).
- Insert the probe (MB991222) from the rear of clock spring connector No.2 and connect the check harness to the probe.

Caution
Never insert the probe directly to the terminals from the front of the connector.

- Disconnect the resistance connector from the SRS check harness (MB991606 or MB991613) and connect to the check harness.
- Connect the negative (–) battery terminal.
- Erase diagnosis code memory.

Is code No.21, 22, 61 or 62 displayed?

YES
Check the following connectors: C-42, C-55,
OK
Check trouble symptoms.
NG
Check wiring harness between clock spring and SRS-ECU.
OK
Replace SRS-ECU.
NG
Repair
NG
Repair

NO
Replace driver's air bag module (squib).

Code Nos.24, 25, 64, 65 Front passenger's air bag module (squib) system	Probable cause
Abnormal resistance is present between input terminals of front passenger's air bag module (squib). See table below for what each code tells. However, once trouble is extinguished, SRS warning lamp will go out. (Diagnosis code will remain stored)	• Defective wiring harnesses or connectors • Malfunction of front passenger's air bag module (squib) • Malfunction of SRS-ECU

Code No.	Trouble causes
24	• Short in front passenger's air bag module (squib) or short harness
25	• Open in front passenger's air bag module (squib) or open harness • Poor connector contact*
64	• Short-circuit in front passenger's air bag module (squib) harness to power supply
65	• Short-circuit in front passenger's air bag module (squib) harness to earth

NOTE
*: The shorting bars, which short positive (+) and negative (–) wires to prevent the air bags from accidental deployment during the disconnection of the connector, are set in the squib circuit connectors. In a defective connector, the short-bar may be still working even after the connection of the connector.

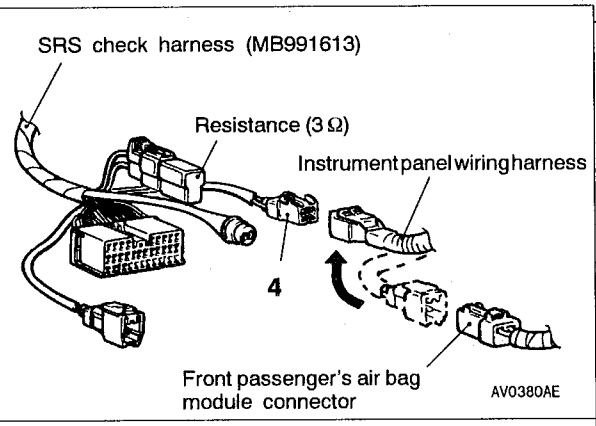

MUT-II Self-diag code
- Disconnect front passenger's air bag module connector C-02, and connect harness side connector to SRS check harness (MB991606 or MB991613) connector No.4.
- Connect negative (–) battery terminal.
- Erase diagnosis code memory.

Is code Nos.24, 25, 64 or 65 output?

YES → **Check following connectors:** C-02, C-42
- OK → Check trouble symptoms.
  - OK → Check wiring harness between front passenger's air bag module and SRS-ECU.
    - OK → Replace SRS-ECU.
    - NG → **Repair**
  - NG → **Repair**
- NG → **Repair**

NO → Replace front passenger's air bag module (squib).

Code No.34 Connector lock system	Probable cause
SRS-ECU connector is poorly connected. However, when vehicle condition returns to normal, this code will be automatically erased, and the SRS warning lamp will go out.	• Defective connector • Malfunction of SRS-ECU

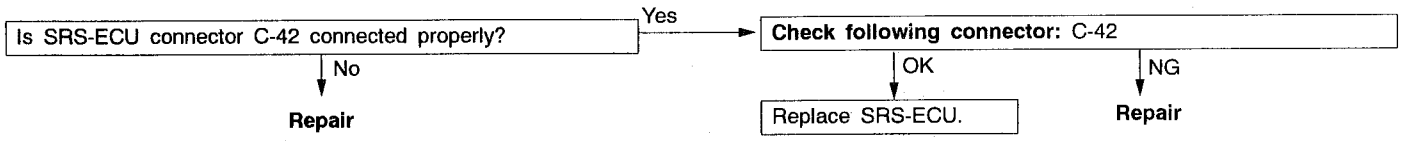

Code No.35 SRS-ECU (deployed air bag) system	Probable cause
This code is displayed after deployment of air bags. If displayed before deployment, the code indicates malfunction probably present in SRS-ECU.	• Malfunction of SRS-ECU

Replace the SRS-ECU.

Code No.41 Power circuit system (fuse No.6 circuit) Code No.42 Power circuit system (fuse No.8 circuit)	Probable cause
Code No.41 is displayed if voltage between IG_1 terminal (SRS–ECU, terminal 12) and earth is lower than specified for five successive seconds or more. Code No.42 is displayed if voltage between IG_1 terminal (SRS–ECU, terminal 9) and earth is lower than specified for five successive seconds or more. However, once trouble is extinguished, these codes will be automatically erased, and SRS warning lamp will go out. If code Nos.41 and 42 are displayed together, check battery first as vehicle may have discharged battery.	• Defective wiring harnesses or connectors • Malfunction of SRS-ECU

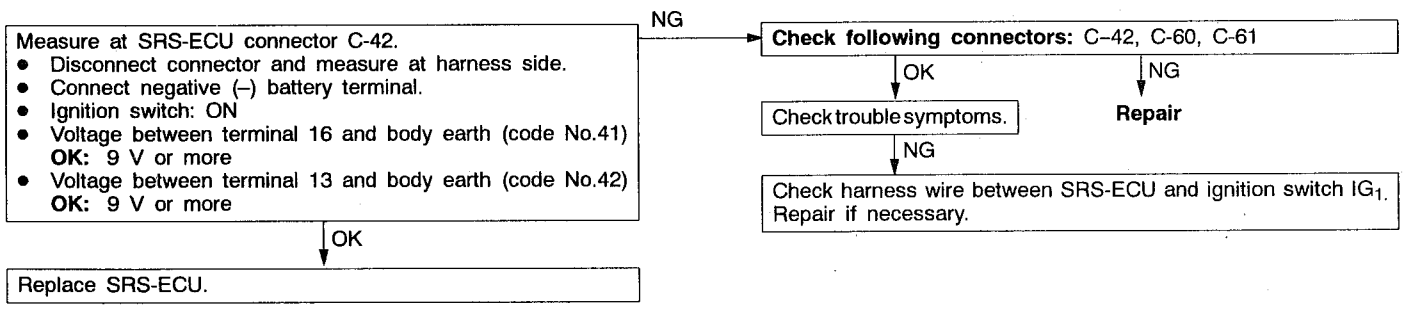

Code No.43 SRS warning lamp drive circuit system (Lamp does not come on)	Probable cause
Open circuit is present for 5 successive seconds or more in SRS warning lamp drive circuit. However, once trouble is extinguished, this code, if displayed due to open circuit, will be automatically erased.	• Defective wiring harnesses or connectors • Blown bulb • Malfunction of SRS-ECU • Malfunction of combination meter

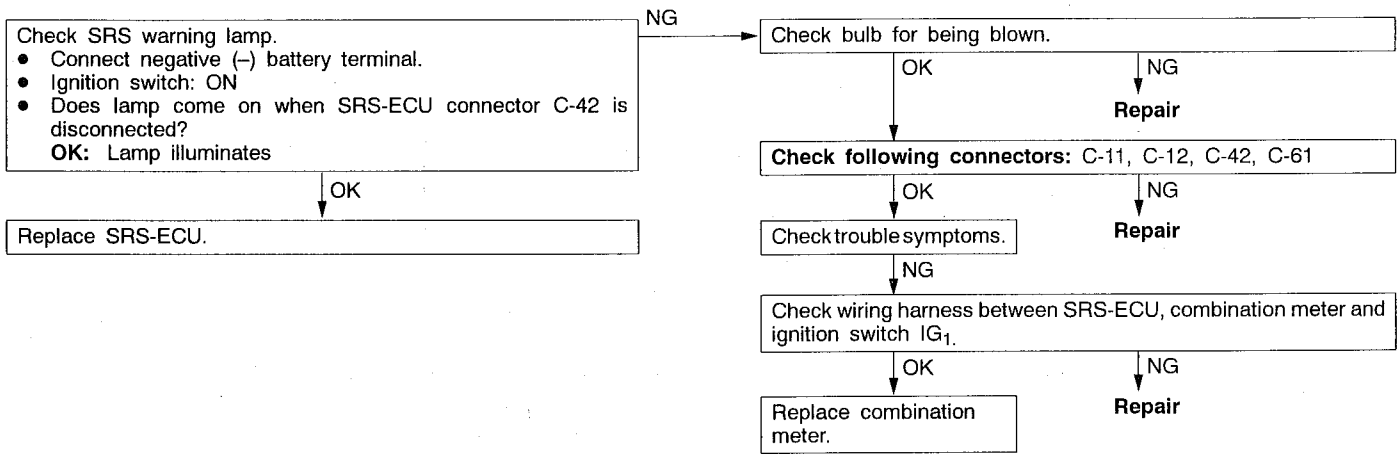

Code No.43 SRS warning lamp drive circuit system (Lamp does not go out)	Probable cause
Harness between SRS warming lamp and SRS-ECU is being shorted to earth However, once trouble is extinguished, this code will be automatically erased, and SRS warning lamp will go out.	• Defective wiring harnesses or connectors • Malfunction of SRS-ECU • Malfunction of combination meter

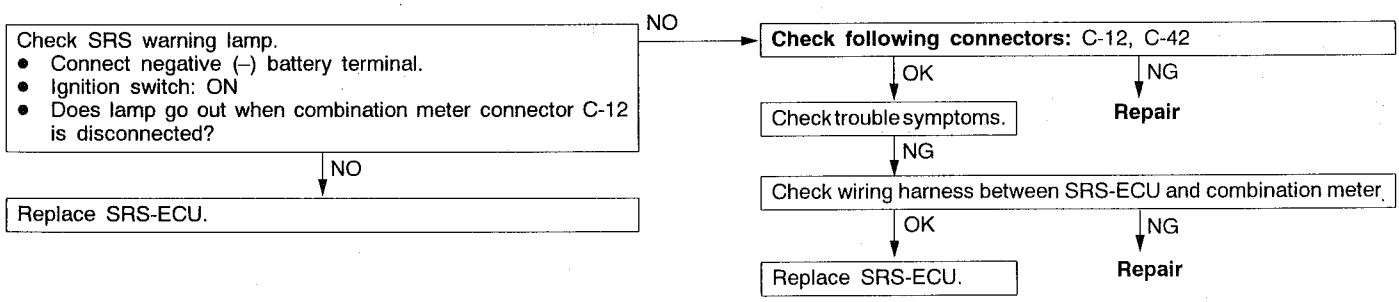

Code No.44 SRS warning lamp drive circuit system	Probable cause
Short is present in SRS warning lamp drive circuit, or output transistor in SRS-ECU is defective. However, once trouble is extinguished, this code will be automatically erased, and SRS warning lamp will go out.	• Defective wiring harnesses or connectors • Malfunction of SRS-ECU

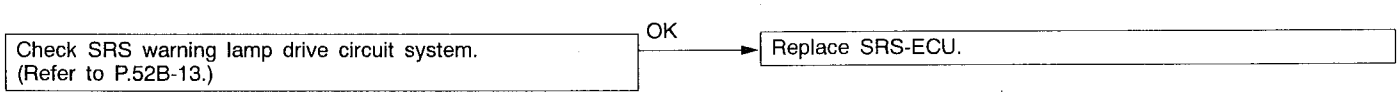

Code Nos.71, 72, 75, 76 Side air bag module (R.H.) (squib) system	Probable cause
Abnormal resistance is present between input terminals of SRS-ECU for side air bag module (R.H.) (squib). See table below for what each code tells. However, as for code Nos. 71 and 72, once trouble is extinguished, SRS warning lamp will go out. (Diagnosis code will remain stored)	• Malfunction of wiring harnesses or connectors • Malfunction of side air bag module (R.H.) (squib) • Malfunction of SRS-ECU

Code No.	Trouble
71	• Short in side air bag module (R.H.) (squib) or harness short
72	• Open in side air bag module (R.H.) (squib) or open harness • Poor connector contact
75	• Side air bag module (R.H.) (squib) harness shorted to power supply
76	• Side air bag module (R.H.) (squib) harness shorted to earth

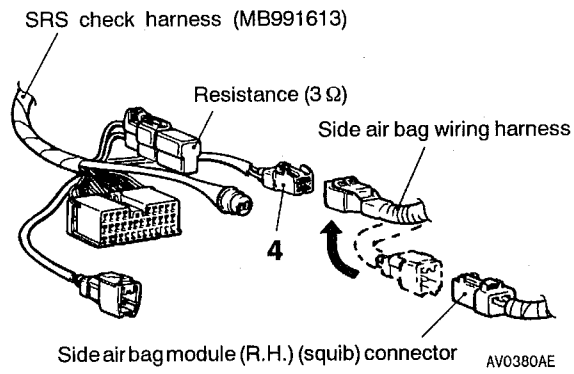

MUT-II Self-diag code
- Disconnect side air bag module (R.H.) (squib) connector D-29, and connect harness side connector to SRS check harness (MB991606 or MB991613) connector No.4.
- Connect negative (–) battery terminal.
- Erase diagnosis code memory.

Is code No.71, 72, 75 or 76 output?

YES → **Check following connectors:** C-41, D-29
- OK → Check trouble symptoms.
  - NG → Check harness wire between side air bag module (R.H.) (squib) and SRS-ECU.
    - OK → Replace SRS-ECU.
    - NG → **Repair**
  - NG → **Repair**
- NG → **Repair**

NO → Replace driver seat back assembly.

Code Nos.81, 82, 85, 86 Side air bag module (L.H.) (squib) system	Probable cause
Abnormal resistance is present between input terminals of SRS-ECU for side air bag module (L.H.) (squib). See table below, for what each code tells. However, as for codes Nos. 81 and 82, once trouble is extinguished, SRS warning lamp will go out. (Diagnosis code will remain stored)	• Defective wiring harnesses or connectors • Malfunction of side air bag module (L.H.) (squib) • Malfunction of SRS-ECU

Code No.	Trouble
81	• Short in side air bag module (L.H.) (squib) or harness short
82	• Open circuit in side air bag module (L.H.) (squib) or open harness • Poor connector contact
85	• Side air bag module (L.H.) (squib) harness shorted to power supply
86	• Side air bag module (L.H.) (squib) harness shorted to earth

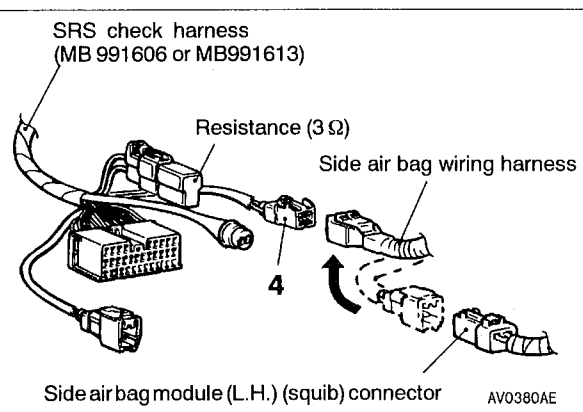

MUT-II Self-diag code
- Disconnect side air bag module (L.H.) (squib) connector D-38, and connect harness side connector to SRS check harness (MB991606 or MB991613) connector No.4.
- Connect negative (–) battery terminal.
- Erase diagnosis code memory.

Is code No.81, 82, 85 or 86 displayed?

YES → **Check following connectors:** C-41, D-36
- OK → Check trouble symptoms.
  - NG → Check harness wire between side air bag module (L.H.) (squib) and SRS-ECU.
    - OK → Replace SRS-ECU.
    - NG → **Repair**
  - NG → **Repair**
- NG → **Repair**

NO → Replace front passenger seat back assembly.

Code No.91 Side impact sensor (L.H.) power supply circut system	Probable cause
Power supply voltage of side impact sensor (L.H.) is lower than specified for five successive seconds or more. However, once trouble is extinguished, this code will be automatically erased, and SRS warning lamp will go out.	• Defective wiring harnesses or connectors • Malfunction of side impact sensor (L.H.) • Malfunction of SRS-ECU

Measure at side impact sensor (L.H.) connector D-36.
- Disconnect connector and measure at the harness side.
- Connect negative (–) battery terminal.
- Ignition switch: ON
- Voltage between terminal No.1 and body earth.
  OK: 9 V or more

OK → Replace side impact sensor (L.H.).

NG → **Check the following connectors:** C-41, D-36
- OK → Check trouble symptoms.
  - NG → Check harness wire between side impact sensor (L.H.) and SRS-ECU.
    - OK → Replace SRS-ECU.
    - NG → **Repair**
  - NG → **Repair**
- NG → **Repair**

Code No.92, 95 Side impact sensor system	Probable cause
Code No.92 is displayed when malfunction is present inside side impact sensor (L.H.). Code No.95 is displayed when malfunction is present inside side impact sensor (R.H.). See INSPECTION CHART 6, below, for what each code tells.	• Malfunction of side impact sensor (L.H.) (Code No.92) • Malfunction of side impact sensor (R.H.) (Code No.95)

Code No.	Defective parts	Trouble
92	Side impact analog G-sensor	• Not working • Having abnormal • Having abnormal output
95		

Replace side impact sensor (L.H.) (code No.92).
Replace side impact sensor (R.H.) (code No.95).

Code No.93 Side impact sensor (L.H.) communication system	Probable cause
Communication between side impact sensor (L.H.) and SRS-ECU is impossible.	• Defective wiring harnesses or connectors • Malfunction of side impact sensor (L.H.) • Malfunction of SRS-ECU

MUT-II Self-diag code
- Replace side impact sensor (L.H.) with side impact sensor (R.H.) and vice versa.
- Connect negative (–) battery terminal.
- Erase diagnosis code memory.

Is code No.93 gone out and code No.96 displayed instead?

NO → **Check following connectors:** C-41, D-36
- OK → Check trouble symptoms.
  - NG → **Repair**
  - NG → Check harness wire between the side impact sensor (L.H.) and SRS-ECU.
    - OK → Replace SRS-ECU.
    - NG → **Repair**
- NG → **Repair**

YES → Replace side impact sensor (L.H.) installed on driver's side.

Code No.94 Side impact sensor (R.H.) power supply circut system	Probable cause
Power supply voltage of side impact sensor (R.H.) is lower than specified for successive five seconds or more. However, once trouble is extinguished, this code will be automatically erased, and SRS warning lamp will go out.	• Defective wiring harnesses or connectors • Malfunction of side impact sensor (R.H.) • Malfunction of SRS-ECU

Measure at side impact sensor (R.H.) connector D-31.
- Disconnect connector and measure at harness side.
- Connect negative (–) battery terminal.
- Ignition switch: ON
- Voltage between terminal (1) and body earth
  OK: 9 V or more

NG → **Check following connectors:** C-41, D-31
- OK → Check trouble symptoms.
  - NG → **Repair**
  - NG → Check harness wire between side impact sensor (R.H.) and SRS-ECU.
    - OK → Replace SRS-ECU.
    - NG → **Repair**
- NG → **Repair**

OK → Replace side impact sensor (R.H.).

Code No.96 Side impact sensor (R.H.) communication system	Probable cause
Communication between side impact sensor (R.H.) and SRS-ECU is impossible.	• Defective wiring harnesses or connectors • Malfunction of side impact sensor (R.H.) • Malfunction of SRS-ECU

MUT-II Self-diag code
- Replace side impact sensor (R.H.) with side impact sensor (L.H.) and vice versa.
- Connect negative battery (–) terminal.
- Erase diagnosis code memory.

Is code No.96 gone out and No.93 displayed instead?

NO → **Check following connectors:** C-41, D-31
- OK → Check trouble symptoms.
  - NG → **Repair**
  - NG → Check harness wire between side impact sensor (R.H.) and SRS-ECU.
    - OK → Replace SRS-ECU.
    - NG → **Repair**
- NG → **Repair**

YES → Replace side impact sensor (R.H.) installed on front passenger's side.

INSPECTION CHART FOR TROUBLE SYMPTOMS

Get an understanding of the trouble symptoms and check according to the inspection procedure chart.

Trouble	Inspection procedure No(s).	Reference page
Communication with MUT-II is impossible.	1	52B-17
SRS warning lamp does not come on.	See diagnosis code No.43.	52B-13
SRS warning lamp does not go out.	See diagnosis code Nos.43, 44.	52B-13

INSPECTION PROCEDURE FOR TROUBLE SYMPTOMS

Inspection Procedure 1

Communication with MUT-II is impossible.	**Probable cause**
When communication with all systems is impossible, diagnosis circuit is suspected as faulty. When only communication with SRS air bags is impossible, open in diagnosis output circuit or power supply circuit including earth circuit may be present.	• Defective wiring harness(es) or connector(s) • Malfunction of SRS-ECU

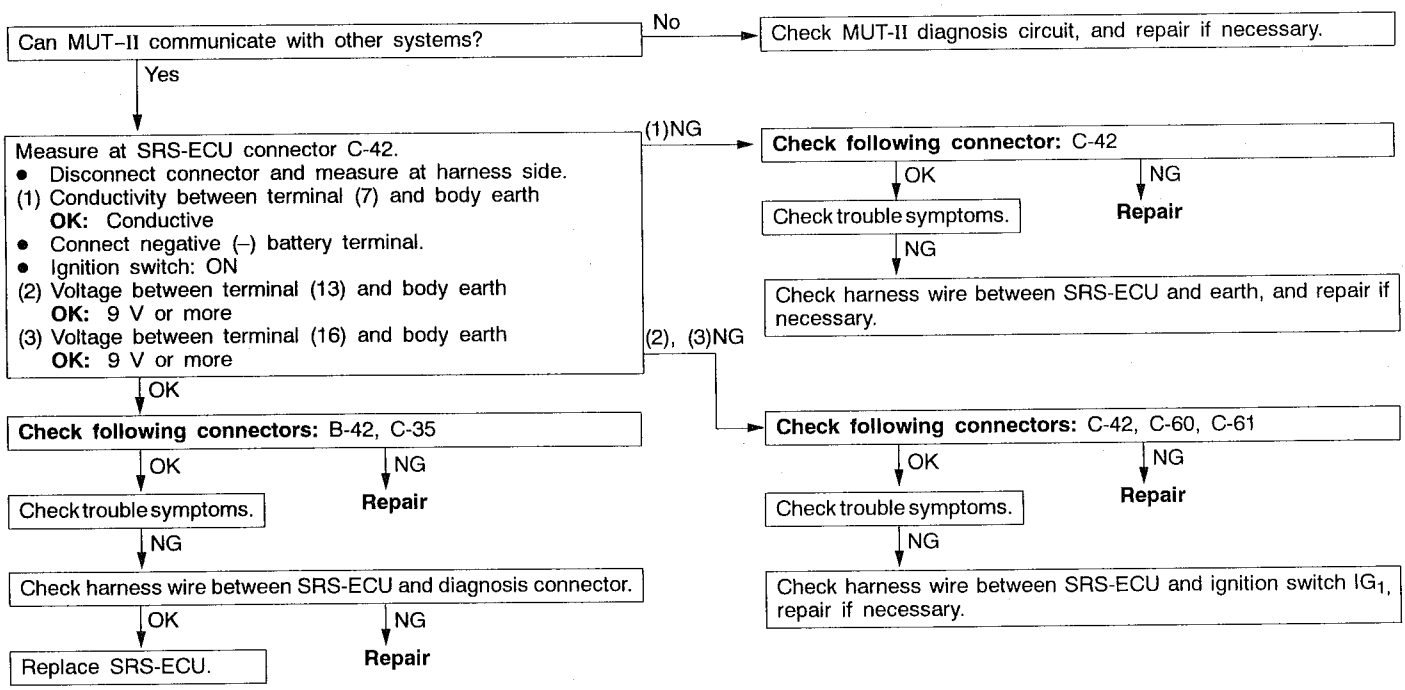

POST-COLLISION DIAGNOSIS

Whether or not the air bags have deployed, check and service the vehicle after collision as follows:

SRS-ECU MEMORY CHECK

1. Connect the MUT-II to the diagnosis connector. (Refer to GROUP 00 – How to Use Troubleshooting/Inspection Service Points.)

   Caution
   Refer to that the ignition switch is "off" when connecting or disconnecting MUT-II.

2. Read (and write down) all displayed diagnosis codes. (Refer to P.52B-8.)

   NOTE
   If battery power supply has been shut down by the collision, the MUT-II cannot communicate with the SRS-ECU. Check and, repair if necessary, the instrument panel wiring harness before the next job.

3. Use the the MUT-II to read the data list (how long trouble(s) have continued and how often memory have been erased).

Data list

No	Service Data Item	Applicability
92	Number indication how often the memory is cleared.	Maximum time to be stored: 250
93	How long problem have lasted (How long it takes from the occurrence of the problem till the first air bag squib igniting signal)	Maximum time to be stored: 9999 minutes (approximately 7 days)
94	How long problem(s) have lasted (How long it takes from the first air bag squib igniting signal till now.)	

4. Erase the diagnosis codes and after waiting 5 seconds or more read (and write down) all displayed diagnosis codes. (Refer to P.52B-8.)

REPAIR PROCEDURE

DEPLOYED DRIVER'S AND FRONT PASSENGER'S AIR BAGS

1. Replace the following parts with new ones.
   - SRS-ECU (Refer to P.52B-23.)
   - Driver's air bag module (Refer to P.52B-26.)
   - Front passenger's air bag module (Refer to P.52B-27.)
2. Check the following parts and replace if malfunction is found:
   - Clock spring (Refer to P.52B-26.)
   - Steering wheel, steering column and intermediate joint
     (1) Check the wiring harness (built into steering wheel) and connectors for damage, and terminals for deformation.
     (2) Check the driver's air bag module for proper installation to the steering wheel.
     (3) Check the steering wheel for noise, binds or difficult operation and excessive free play.
3. Check the harness for binding, connectors for damage, poor connections, and terminals for deformation. (Refer to P.52B-5.)

DEPLOYED SIDE AIR BAGS

1. Replace the following parts with new ones:
   - SRS-ECU (Refer to P.52B-23.)
   - Side impact sensors (Refer to P.52B-33.)
   - Front seat back assemblies (Refer to P.52B-28.)
2. Check harnesses for binding, connectors for damage, poor connections, and terminals for deformation. (Refer to P.52B-5.)

UNDEPLOYED AIR BAGS IN LOW-SPEED COLLISION

Check the SRS components. If visible damage such as dents, cracks, or deformation are found on the SRS components, replace them with new ones. Concerning parts removed for inspection, replacement with new parts and cautions in working, refer to INDIVIDUAL COMPONENT SERVICE, P.52B-21

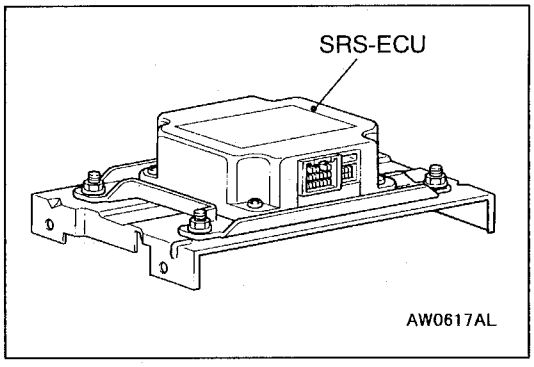

SRS-ECU

1. Check the SRS-ECU case and bracket for dents, cracks or deformation.
2. Check the connector for damage, and terminals for deformation.
3. Check the SRS-ECU and bracket for proper installation.

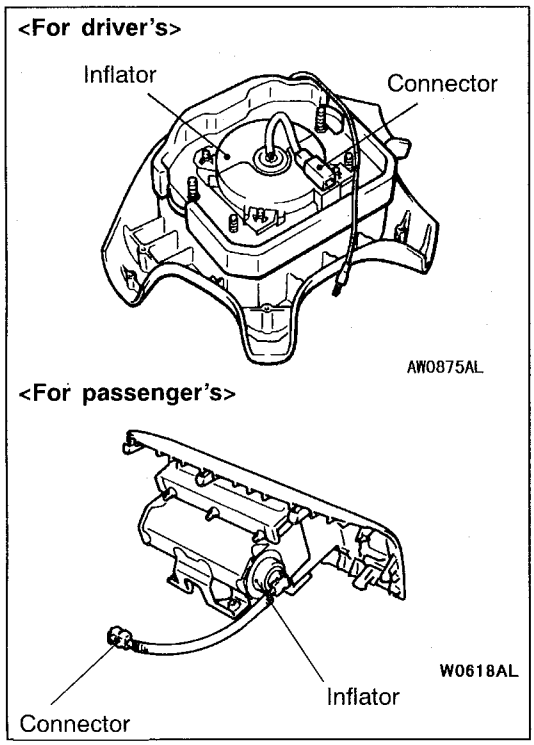

Driver's and passenger's air bag modules

1. Check the covers for dents, cracks or deformation.
2. Check the connectors for damage, the terminals deformities, and the harness for binds.
3. Check the air bag inflator cases for dents, cracks or deformities.
4. Check the air bag modules for proper installation.

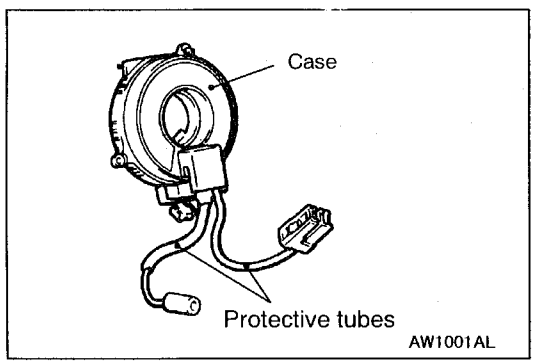

Clock spring

1. Check the clock spring connectors and protective tubes for damage, and terminals for deformation.
2. Visually check the case for damage.

Steering wheel, steering column and intermediate joint

1. Check the driver's air bag module for proper installation to the steering wheel.
2. Check the steering wheel for noise, binds or difficult operation and excessive free play.

Harness connector (Instrument panel wiring harness)

Check the harness for binds, the connector for damage and the terminals for deformation. (Refer to P.52B-5.)

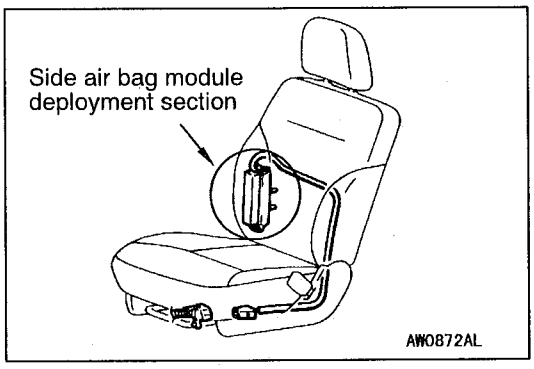

Front seat back assembly (side air bag module)

1. Check the side air bag module deployment section in the seat for dents and deformation.
2. Check the harness for binds, the connector for damage and the terminals for deformation.

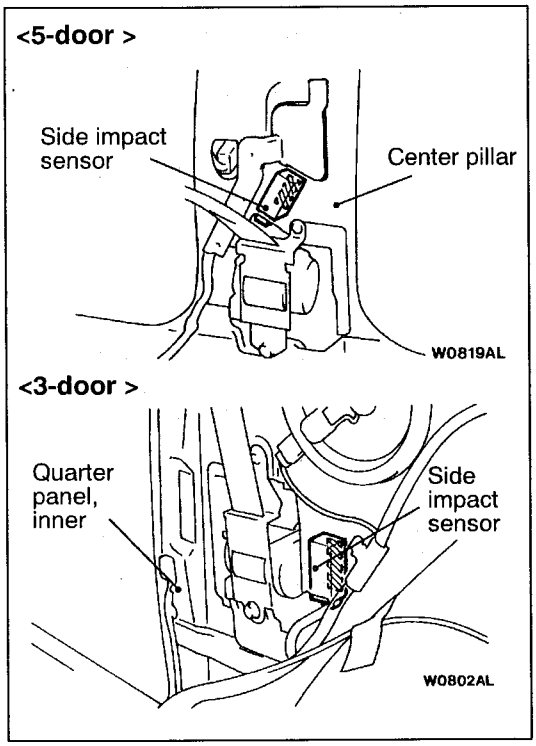

Side impact sensor

1. Check the center pillar <5-door> or the quarter panel, inner <3-door> for deformation or rust.
2. Check the side impact sensors for dents, cracks, deformation and rust.
3. Check the connector for damage and the terminals for deformation.

NOTE
The figures show side impact sensors (L.H.).

Harness connector (Instrument panel wiring harness and side air bag wiring harness)

Check the harness for binds, the connector for damage and the terminals for deformation. (Refer to P.52B-5.)

INDIVIDUAL COMPONENT SERVICE

If the SRS components are to be removed or replaced as a result of maintenance, troubleshooting etc., follow the service procedures that follow. (P.52B-23 to 34.)

Caution

1. **SRS components should not be subjected to temperature over 93°C, so remove the SRS-ECU, driver's and front passenger's air bag modules, clock spring, side impact sensors and front seat assemblies (side air bag modules) before drying or baking the vehicle after painting.**
2. **If the SRS components are removed for the purpose of check, sheet metal repair, painting, etc., they should be stored in a clean, dry place until they are reinstalled.**

WARNING/CAUTION LABELS

Caution labels on the SRS are attached in the vehicle as shown. Follow label instructions when servicing the SRS. If the label(s) are dirty or damaged, replace with new one(s).

Steering wheel

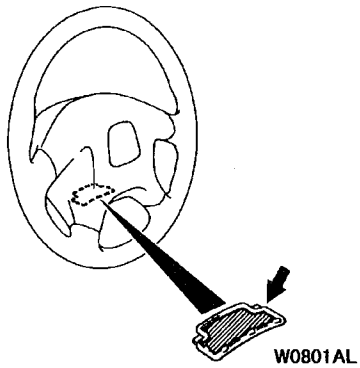

W0801AL

Driver's air bag module

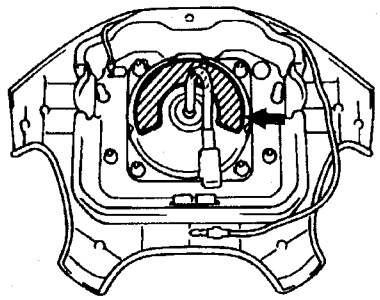

W0815AL

Clock spring

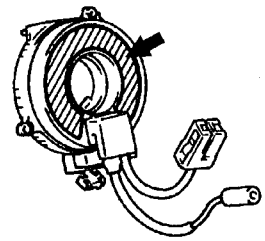

BW0963AL

Sun visor

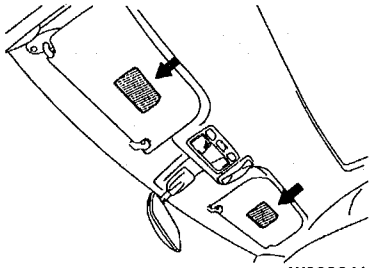

W0203AL

SRS-ECU

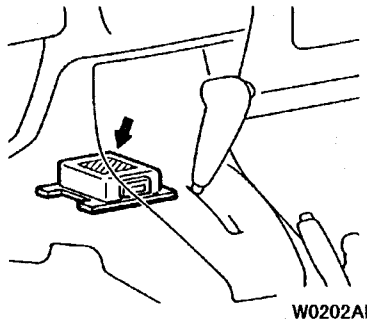

W0202AL

Glove box

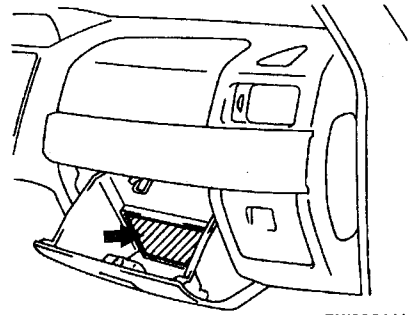

BW0964AL

Front passenger's air bag module

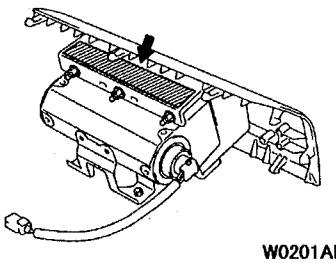

W0201AL

Steering gear box

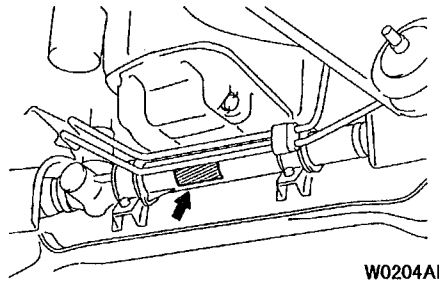

W0204AL

Side impact sensor

<3-door>

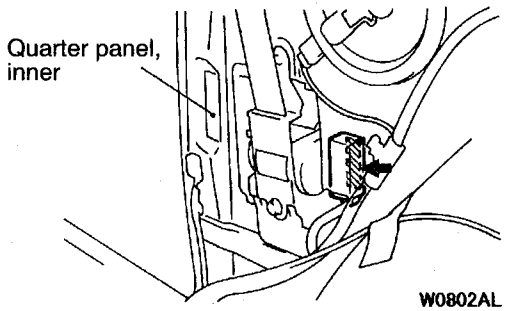

W0802AL

<5-door>

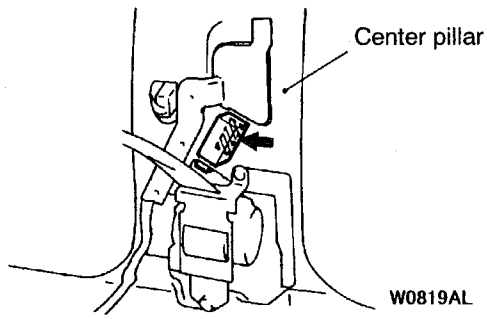

W0819AL

SRS AIR BAG CONTROL UNIT (SRS-ECU)

Caution

1. **Disconnect the negative (–) battery terminal and wait for 60 seconds or more before starting work. Also, the disconnected battery terminal should be insulated with tape. (Refer to P.52B-4.)**
2. **Never attempt to disassemble or repair the SRS-ECU. If faulty, just replace with a new one.**
3. **Do not drop or subject the SRS-ECU to impact or vibration.**
   If denting, cracking, deformation, or rust are found in the SRS-ECU, replace it with a new one. Discard the old one.
4. **After deployment of the air bags, replace the SRS-ECU with a new one.**
5. **Never use an ohmmeter on or near the SRS-ECU, and use only the special test equipment described on P.52B-7.**

REMOVAL AND INSTALLATION

Pre-removal Operation
- Turn Ignition Key to LOCK (OFF) Position.
- Disconnect the Negative (–) Battery Terminal.

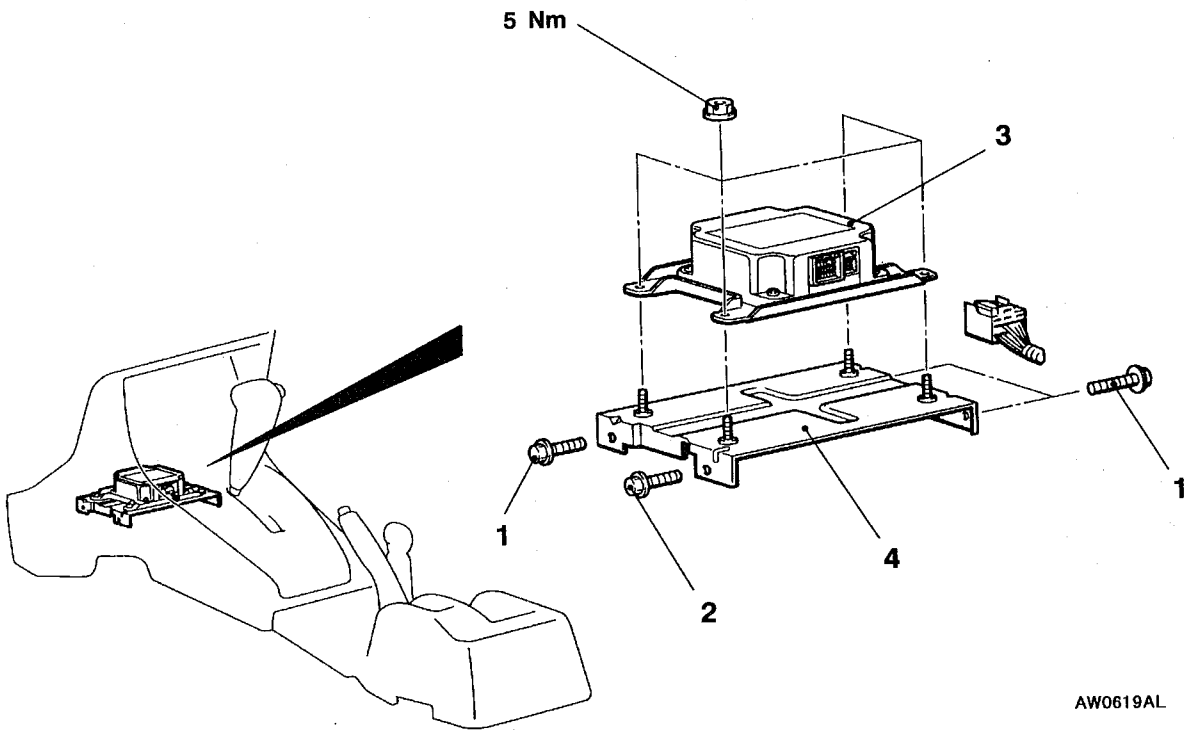

Removal steps
- Floor console (Refer to GROUP 52A.)
1. Bracket mounting bolts
▶B◀ 2. Bracket mounting bolt (Earth bolt)
▶A◀ 3. SRS-ECU
4. SRS-ECU bracket

Installation steps
4. SRS-ECU bracket
▶A◀ 3. SRS-ECU
2. Bracket mounting bolt (Earth bolt)
1. Bracket mounting bolt
- Floor console (Refer to GROUP 52A.)
- Negative (–) battery cable connection
▶B◀ • Post-installation inspection

INSTALLATION SERVICE POINTS

▶A◀ SRS-ECU INSTALLATION

Caution
Be sure to install the SRS-ECU properly. Otherwise, the SRS air bags do not activate, which results in serious injury or death of vehicle's occupants.

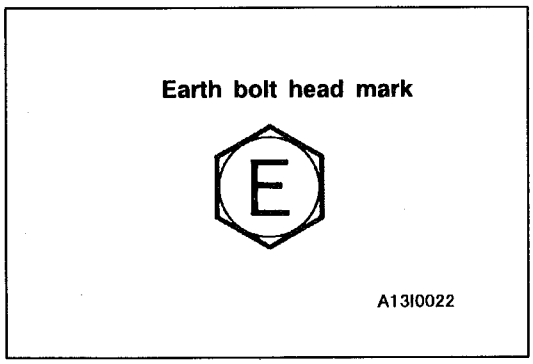

▶B◀ BRACKET MOUNTING BOLT (EARTH BOLT) INSTALLATION

Before installation, Refer to that the bolt is stamped mark "E" on the head.

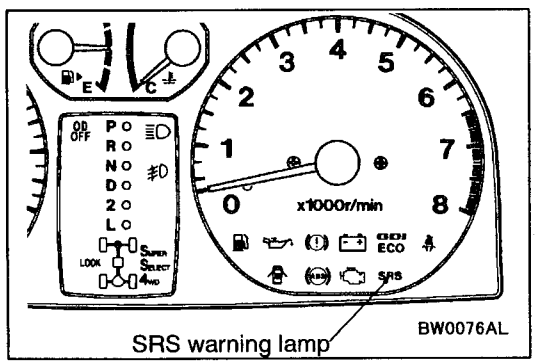

▶C◀ POST-INSTALLATION CHECK

1. Turn the ignition switch to ON.
2. Does the SRS warning lamp illuminate for about 7 seconds and then go out for more than 5 seconds?
3. Yes: The SRS warning lamp is working properly
   No: Go to Troubleshooting. (Refer to P.52B-7.)

INSPECTION

1. Check the SRS-ECU and brackets for dents, cracks or deformation.
2. Check connector for damage, and terminals for deformation.

   Caution
   If a dent, crack, deformation or rust are present, replace the SRS-ECU with a new one.

   NOTE
   To check the SRS-ECU in other items than described above, go to Troubleshooting. (Refer to P.52B-7.)

AIR BAG MODULES AND CLOCK SPRING

Caution

1. Disconnect the negative (–) battery terminal and wait for 60 seconds or more before starting work. Also, the disconnected battery terminal should be insulated with tape. (Refer to P.52B-4.)
2. Never attempt to disassemble or repair the air bag modules and clock spring. If faulty, just replace with new one(s).
3. Do not drop the air bag modules or clock spring or allow contact with water, grease or oil. Replace if a dent, crack, deformation or rust are present.
4. Store the air bag modules on a flat surface with the deployment surface facing up. Do not place anything on top of them.
5. Do not store the air bag modules in a place more than 93°C.
6. When the driver's and front passenger's air bags have been deployed, replace the driver's and passenger's air bag modules with new ones.
7. Put on gloves and safety glasses when handling deployed air bags.
8. When discarding the undeployed air bag module(s), be sure to deploy the air bag(s) in advance as specified in the service procedure. (Refer to to P.52B-35.)

REMOVAL AND INSTALLATION

<Driver's air bag module, clock spring>

Pre-removal Operation
- Put Steering Wheel and Front Wheels in Straight-ahead Position. Remove Ignition Key.
- Disconnect the Negative (–) Battery Terminal.

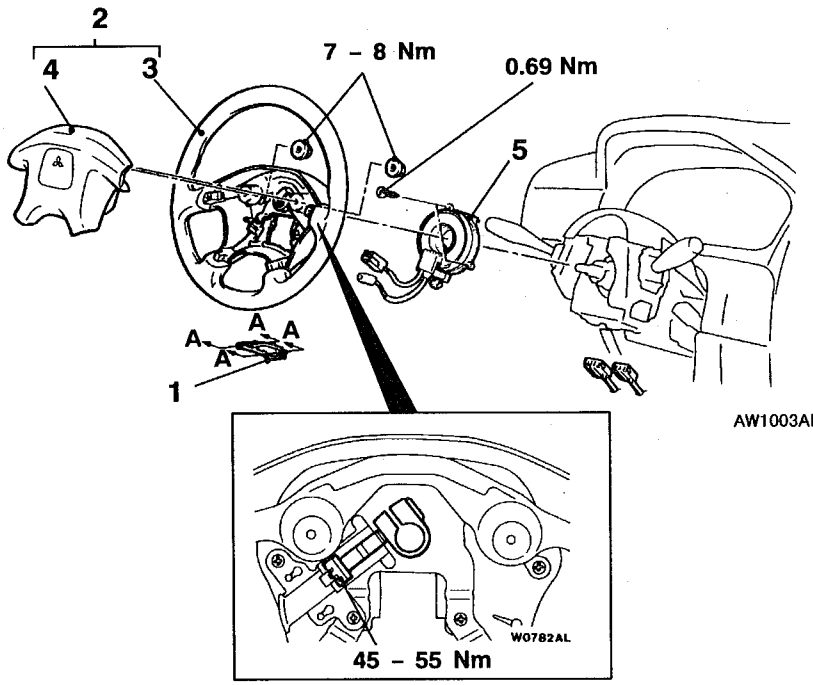

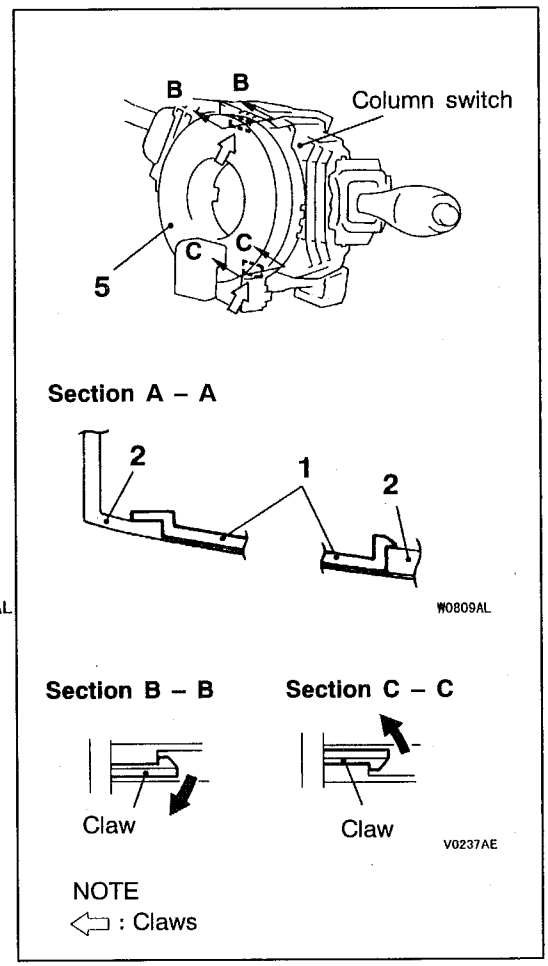

Driver's air bag module removal steps

◀A▶ 1. Cover
◀B▶ 2. Steering wheel and air bag module assembly
3. Steering wheel
◀C▶ 4. Driver's air bag module

Clock spring removal steps

◀A▶ 1. Cover
◀B▶ 2. Steering wheel and air bag module assembly
• Lower column cover
◀D▶ 5. Clock spring

Driver's air bag module installation steps

▶A◀ • Pre-installation inspection
4. Driver's air bag module
3. Steering wheel
▶C◀ 2. Steering wheel and air bag module assembly
1. Cover
• Negative (–) battery cable connection
▶A◀ • Post-installation check

Clock spring installation steps

▶A◀ • Pre-installation check
▶B◀ 5. Clock spring
• Lower column cover
▶C◀ 2. Steering wheel and air bag module assembly
1. Cover
• Negative (–) battery cable connection
▶D◀ • Post-installation inspection

<Front passenger's air bag module>

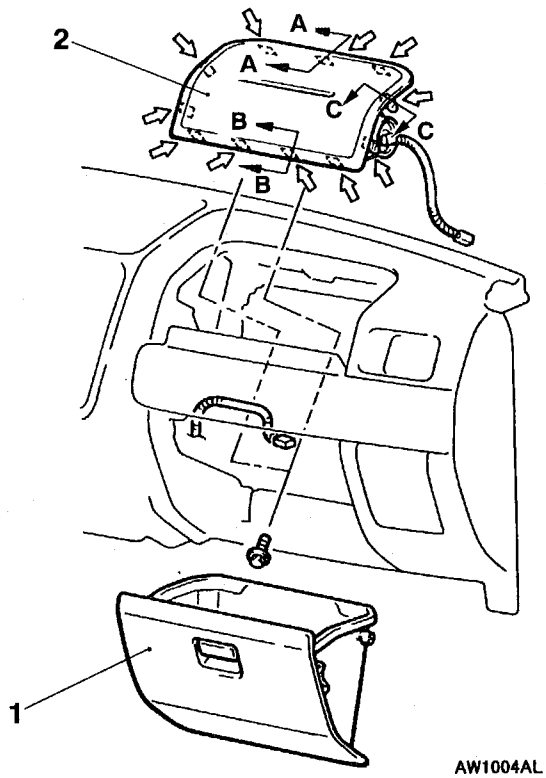

Sections A – A and C – C

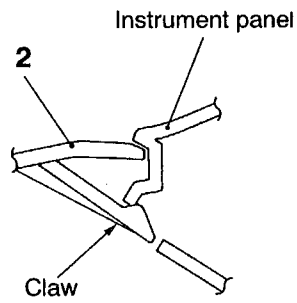

Section B – B

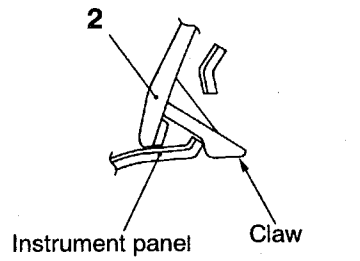

NOTE
⇦ : Claws

Removal steps

1. Glove box
◀E▶ 2. Passenger's air bag module

Installation steps

▶A◀ • Pre-installation inspection
2. Passenger's air bag module
1. Glove box
• Negative (–) battery cable connection
▶D◀ • Post-installation inspection

<Front seat back assembly with side air bag module (Vehicles with side air bag)>

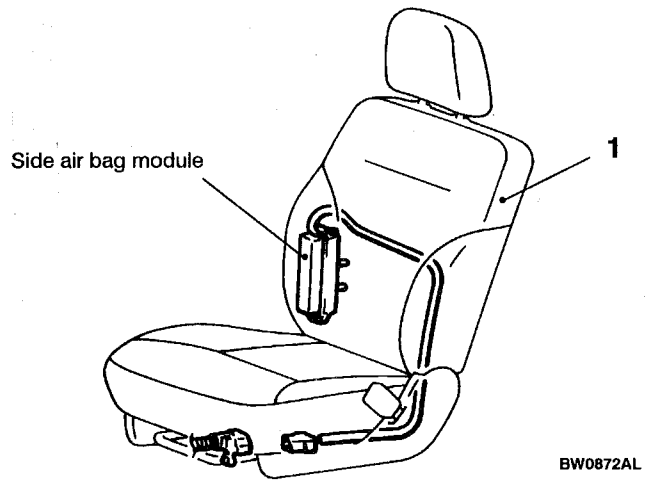

Removal steps

◀F▶ 1. Front seat back assembly

Installation steps

▶A◀ • Pre-installation inspection
1. Front seat back assembly
• Negative (–) battery cable connection
▶D◀ • Post-installation inspection

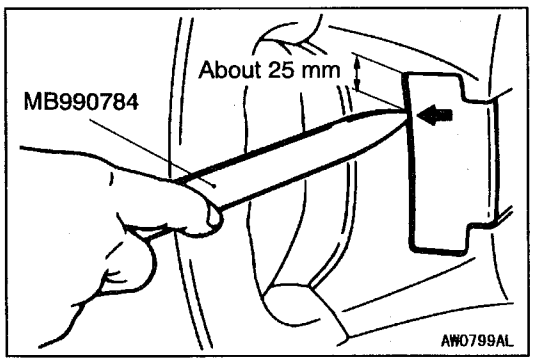

REMOVAL SERVICE POINTS

◀A▶ COVER REMOVAL

Remove the cover by inserting the special tool from the place as shown.

NOTE
The special tool can be inserted through the notch behind the position shown.

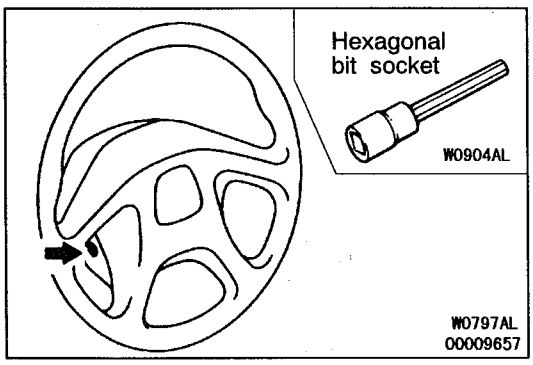

◀B▶ STEERING WHEEL AND AIR BAG MODULE ASSEMBLY REMOVAL

1. Remove the air bag module and disconnect the horn switch connector through space produced after the removal of the steering wheel.
2. Loosen the bolt completely and then remove the steering wheel assembly.

NOTE
Use a hexagonal bit socket or a hexagonal wrench having an effective length of 75 mm or more in the hexagonal section and the diameter of 8 mm or more.

◀C▶DRIVER'S AIR BAG MODULE REMOVAL POINT

Caution

1. **The air bag module must not be measured with such equipment as an ohmmeter, nor disassembled.**
2. **The removed air bag module should be stored in a clean, dry place with the deployment surface facing up.**

◀D▶CLOCK SPRING REMOVAL

Caution

The removed clock spring should be stored in a clean, dry place.

◀E▶PASSENGER'S AIR BAG MODULE REMOVAL

Caution

The removed air bag module should be stored in a clean, dry place with the deployment surface facing up.

◀F▶FRONT SEAT BACK ASSEMBLY REMOVAL

Refer to GROUP 52A – Seat.

Caution

1. **When the side air bag module is required replacing, replace the front seat back assembly.**
2. **The removed front seat back assembly should be stored in clean, dry place with its back touching the ground.**

INSTALLATION SERVICE POINTS

▶A◀ PRE-INSTALLATION INSPECTION

1. Even new air bag modules and a clock spring require inspection before installation. (Refer to P.52B-31.)

   Caution
   When discarding the air bag module or seat back assembly, deploy the air bag as specified in the service procedure. (Refer to P.52B-35.)

2. Connect the negative (–) battery terminal.
3. Connect the MUT-II to the diagnosis connector (16-pin).

   Caution
   Turn the ignition switch to LOOK (OFF) position when connecting and disconnecting the MUT-II.

4. Turn the ignition switch to ON.
5. Read a diagnostic code to Refer to that the SRS is operating properly except an open in the air bag module circuit.
6. Turn the ignition switch to LOCK (OFF) position. Disconnect the negative (–) battery cable and insulate with tape.

   Caution
   Wait at least 60 seconds after the disconnection of the battery cable before any further job. (Refer to P.52B-4.)

▶B◀ CLOCK SPRING INSTALLATION

Align the mating marks on the clock spring as mentioned in the next step. Then, after putting the front wheels in straight-ahead position, install the clock spring to the column switch.

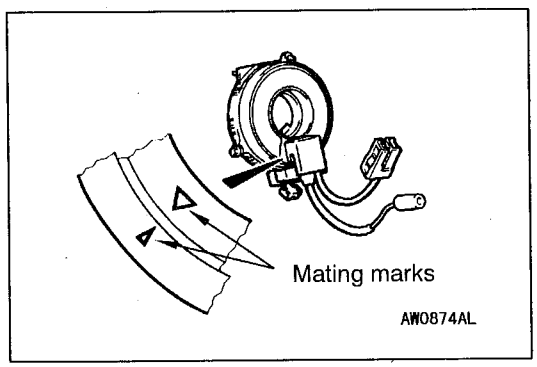

Clock Spring Centring

Fully turn the clock spring clockwise and then turn it back about 3 times counterclockwise to align the mating marks.

Caution
Unless the mating marks are properly aligned, the steering wheel gets stuck amid a turn or the flat cable in the clock spring is cut. These hinder the SRS air bag from proper operation, resulting in serious injury to the vehicle's driver.

▶C◀ STEERING WHEEL AND AIR BAG MODULE ASSEMBLY INSTALLATION

1. Refer to first that the clock spring has been centred properly. Then, install the steering wheel.

   Caution
   Be sure, when installing the steering wheel, not to have the clock spring harness caught or tangled.

2. After the installation, check the steering wheel for proper operation by turning it fully right and left.

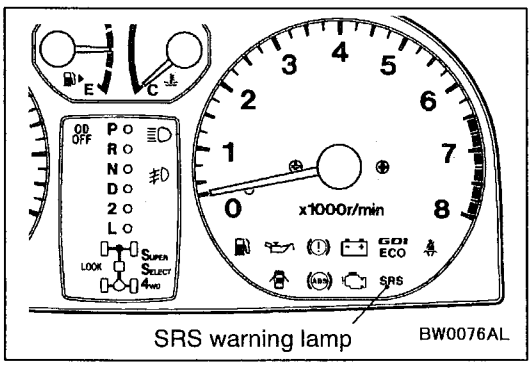

▶D◀ POST-INSTALLATION CHECK

1. Lightly turn the steering wheel right and left to Refer to that noise and malfunction are not present.
2. Turn the ignition switch to "ON".
3. Does the SRS warning lamp illuminate for about 7 seconds and then go out for 5 seconds or more?
4. Yes: The SRS is working properly.
   No: Go to Troubleshooting (Refer to P.52-7.)

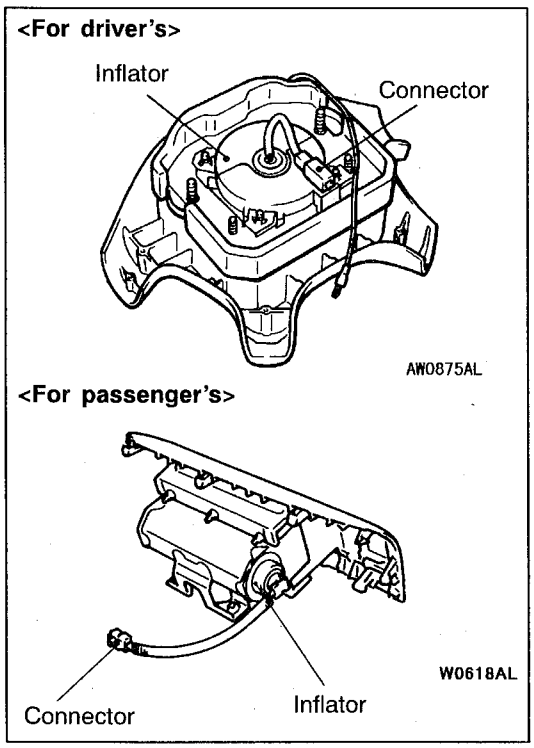

INSPECTION

DRIVER'S AND PASSENGER'S AIR BAG MODULE INSPECTION

If any malfunction is found in the following inspection, replace the air bag module(s) with new one(s).
Discard the old one(s) after deployment as specified in the service procedure. (Refer to P.52B-35.)

Caution
Never measure circuit resistance in the air bag modules (squib) even with the specified tester. Measuring the circuit resistance with a tester causes accidental air bag deployment due to current that flows or static, resulting in serious personal injury.

1. Check the cover for dents, cracks or deformation.
2. Check the connectors for damage, terminals for deformation, and harness for binds.
3. Check the air bag inflator cases for dents, cracks or deformation.
4. Install the driver's air bag module to the steering wheel and check fit or alignment with the steering wheel.
5. Install the front passenger's air bag module to instrument panel and crossmember and check fit and alignment.

   Caution
   If dents, cracks, deformation, or rust are present in the air bag module(s), replace with new one(s). Discard the old one(s) as specified in the service procedure. (Refer to P.52B-35.)

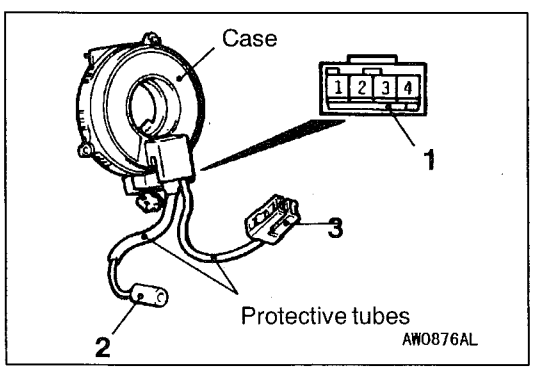

CLOCK SPRING CHECK

If any malfunction is found in the following inspections, replace the clock spring with a new one.

1. Check the connectors and protective tubes for damage, and terminals for deformation.
2. Visually check the case for damage.
3. Refer to that the clock spring has continuity between connector No.2 and terminal No.4 of connector No.1.

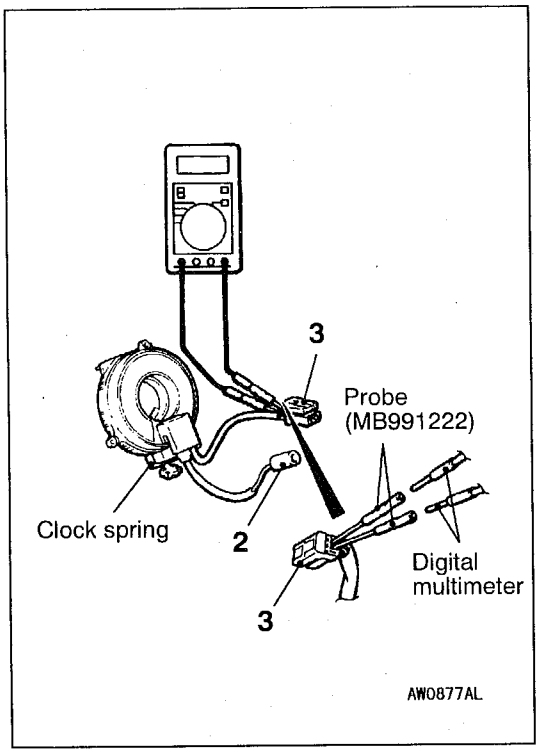

4. Insert the probe (MB991222) from the rear of connector No.3 of the clock spring.

Caution
The probe must not be inserted directly to the terminals from the front of the connector.

5. Connect a digital multimeter to the probe (MB991222), as shown, to check that conductivity is present between the terminals.

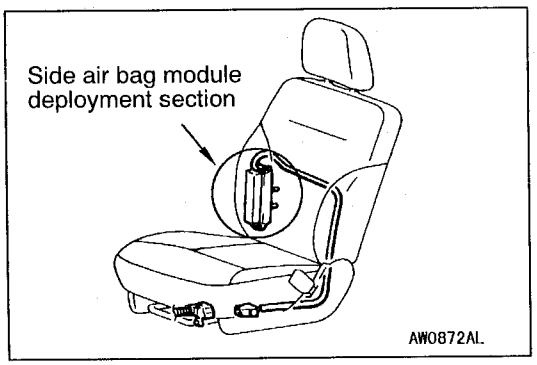

FRONT SEAT BACK ASSEMBLY WITH SIDE AIR BAG MODULE

If any malfunction is found in the following inspections, replace the front seat back assembly.
To discard the removed front seat back assembly, deploy the side air bag first as specified in the service procedure. (Refer to P.52B-35.)

Caution
Never measure circuit resistance in the air bag modules (squib) even with the specified tester. Measuring the circuit resistance with a tester causes accidental air bag deployment due to current that flows or static, resulting in serious personal injury.

1. Check the side air bag module deployment section for dents and deformation.
2. Check the harness and connector for damage and the terminals for deformation.

SIDE IMPACT SENSOR

Caution

1. **Disconnect the negative (–) battery terminal and wait for 60 seconds or more before starting work. Also, the disconnected battery terminal should be insulated with tape. (Refer to P.52B-4.)**
2. **Never attempt to disassemble or repair the side impact sensors. If faulty, just replace with new ones.**
3. **Do not drop or subject the side impact sensors to impact or vibration. If denting, cracking, deformation, or rust are found in the side impact sensors, replace it with new ones. Discard the old ones.**
4. **After deployment of the air bags, replace the side impact sensors with new ones.**
5. **Never use an ohmmeter on or near the side impact sensors, and use only the special test equipment described on P.52B-7.**

REMOVAL AND INSTALLATION

Pre-removal Operation
- Turn Ignition Key to LOCK (OFF) Position.
- Disconnect the Negative (–) Battery Terminal.

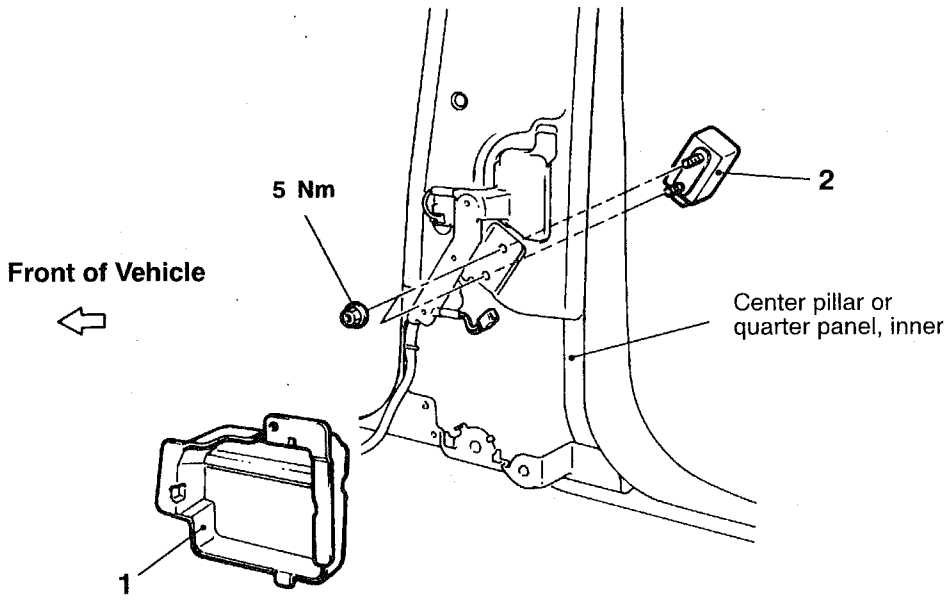

AW0878AL

Removal steps
- Front seat belt (Refer to GROUP 52A.)

1. Front noise protector
2. Side impact sensor

Installation steps

▶A◀ • Pre-installation inspection
▶B◀ 2. Side impact sensor
1. Front noise protector
- Front seat belt (Refer to GROUP 52A.)
- Negative (–) battery cable connection

▶C◀ • Post-installation inspection

NOTE
The figure shows the side impact sensor (R.H.).

▶A◀ PRE-INSTALLATION INSPECTION

Even new side impact sensor requires inspection before installation. (Refer to Inspection.)

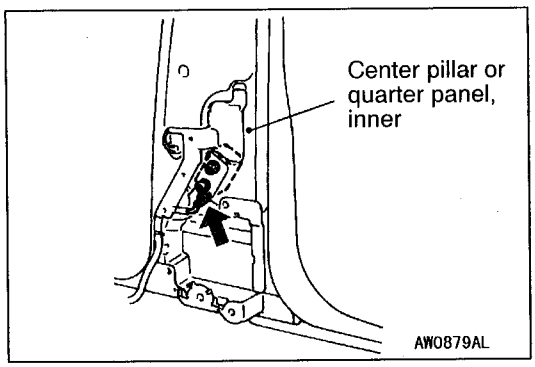

▶B◀ SIDE IMPACT SENSOR INSTALLATION

Install the front seat belt cover and connect the connectors.

Caution
The side impact sensor, unless properly installed, does not operate properly, thereby resulting in serious injury or death of the vehicle's occupants.

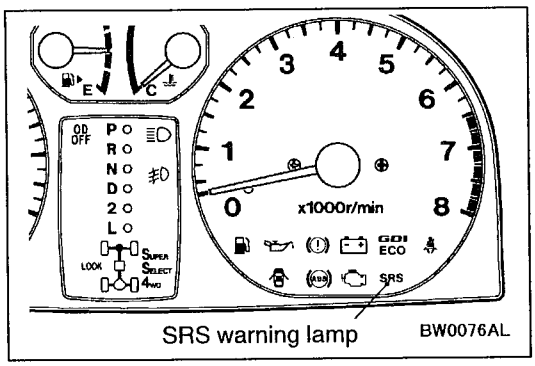

▶C◀ POST-INSTALLATION INSPECTION

1. Turn the ignition switch to ON.
2. Does the SRS warning lamp illuminate for about 7 seconds and go off for 5 seconds or more?
3. YES: The system is working properly.
   NO: Go to Troubleshooting. (Refer to P.52B-7.)

INSPECTION

If any malfunction is found in the following inspections, replace the side impact sensor(s) with new one(s).

1. Check the side impact sensors for dents, cracks, deformation and rust.
2. Check the connector for damage and the terminals for deformation.
3. Check the center pillar or quarter panel, inner for deformation and rust.

NOTE
For other inspections than described above, go to Troubleshooting. (P.52B-7.)

AIR BAG MODULE DISPOSAL PROCEDURES

When discarding the air bag modules or a vehicle with SRS air bags, be sure to deploy the air bags in advance as specified in the service procedure that follows.

UNDEPLOYED AIR BAG MODULES

Caution

1. **If the vehicle is to be scrapped or otherwise disposed of, deploy the air bags inside the vehicle. If the vehicle is still to be used and only the air bag modules are to be discarded, deploy the air bags outside the vehicle.**
2. **Since a large amount of smoke is produced when the air bags are deployed, avoid residential areas whenever possible.**
3. **Since there is substantial report when the air bags are deployed, avoid residential areas whenever possible. If anyone is nearby, give warning of the impending noise.**
4. **Suitable ear protection must be put on by personnel performing these procedures or by people in the immediate area.**

DEPLOYMENT INSIDE THE VEHICLE

1. Move the vehicle to flat and isolated spot.
2. Disconnect the negative (–) and positive (+) battery cables from the battery terminals, and then remove the battery from the vehicle.

   Caution
   Wait at least 60 seconds after the disconnection of the battery cables before any further job. (Refer to P.52B-4.)

3. Deploy each air bag module as specified in the service procedures that follow.

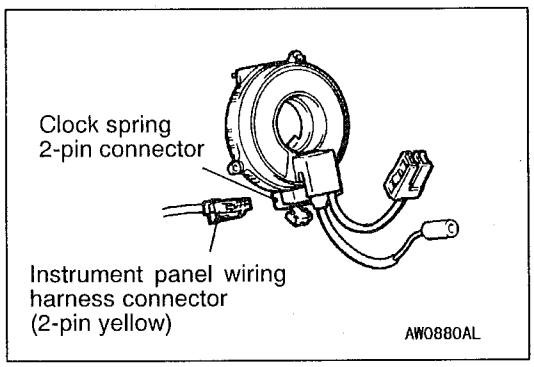

Driver's air bag module

(1) Remove the steering column cover, lower.
(Refer to GROUP 52A – Instrument Panel.)

(2) Disconnect the clock spring 2-pin connector and instrument panel wiring harness connector (2-pin, yellow).

NOTE
Once disconnected from the instrument panel wiring harness, both electrodes of the clock spring connector short automatically. This prevents the driver's air bag from accidental deployment caused by static, etc.

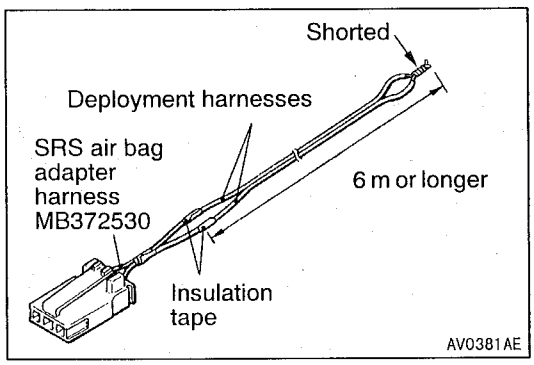

(3) Connect deployment harnesses longer than 6 m to each SRS air bag adapter harness and insulate the connections with plastic tape.
Also, connect the deployment harnesses in the other ends to short, thereby preventing the driver's air bag from accidental deployment caused by static etc.

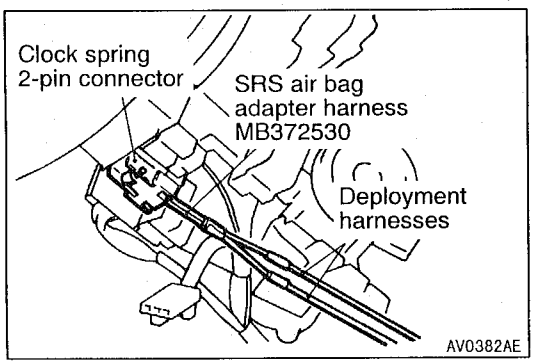

(4) Connect the SRS air bag adapter harness to the clock spring 2-pin connector and route the deployment harnesses out of the vehicle.

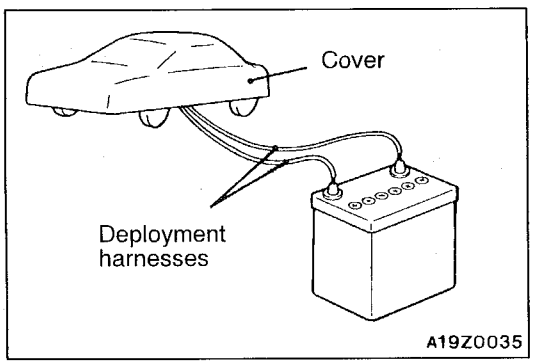

(5) Close all the doors with the windows fully closed and put a cover over the vehicle to minimize report.

Caution
The cover is required as the glass, if already damaged, may break.

(6) Separate the deployment harnesses as far from the vehicle as possible and connect to the terminals of the battery removed from the vehicle. Then deploy.

Caution
1) **Before deploying the air bag, see that no one is in and near the vehicle. Also, put on safety glasses.**
2) **The deployment makes the inflator of the driver's air bag very hot. Before handling the inflator, wait more than 30 minutes for cooling.**
3) **If the air bag module fails to deploy although the procedure is respected, do not go near the module. Contact your local distributor.**

(7) Discard the deployed air bag module according to Deployed Air Bag Module Disposal Procedures. (Refer to P.52B-44.)

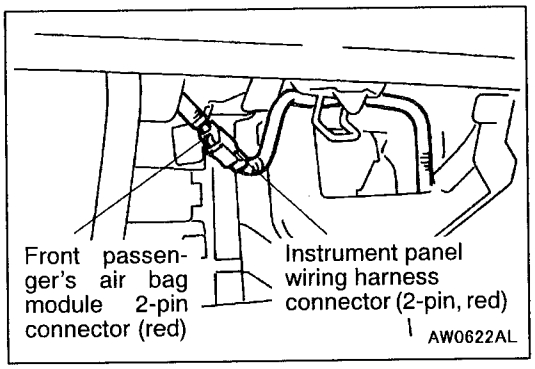

Front passenger's air bag module

(1) Remove the glove box.
(Refer to GROUP 52A – Instrument Panel.)

(2) Disconnect the front passenger's air bag module 2-pin connector (red) and instrument panel wiring harness connector (2-pin, red).

NOTE
Once disconnected from the instrument panel wiring harness, both electrodes of the front passenger's air bag module short automatically. This prevents the front passenger air bag from accidental deployment caused by static, etc.

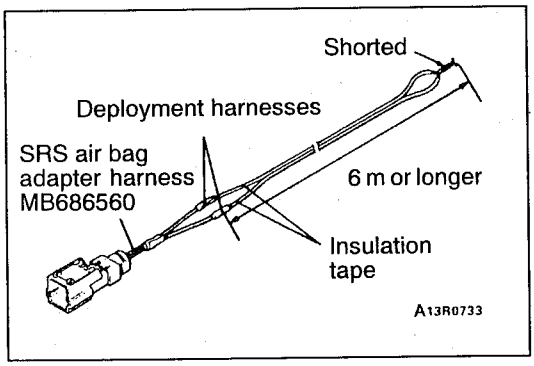

(3) Connect deployment harnesses longer than 6 m to each SRS air bag adapter harness and insulate the connections with plastic tape.
Also, connect the deployment harnesses in the other ends to short, thereby preventing the front passenger's air bag from accidental deployment caused by static etc.

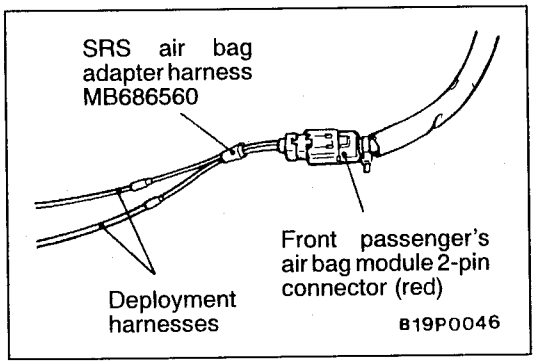

(4) Connect the SRS air bag adapter harness to the front passenger's air bag module 2-pin connector and route the deployment harnesses out of the vehicle.

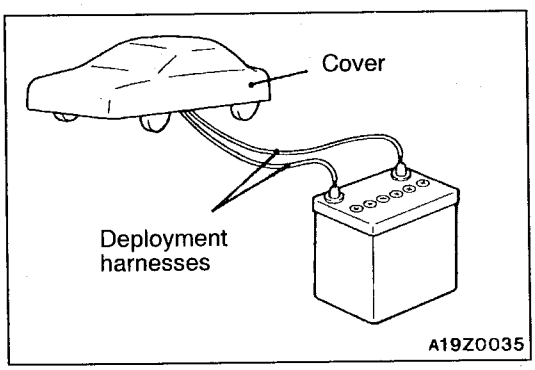

(5) Close all the doors with the windows fully closed and put a cover over the vehicle to minimize report.

Caution
The cover is required as the glass, if already damaged, may break.

(6) Separate the deployment harnesses as far from the vehicle as possible and connect to the terminals of the battery removed from the vehicle. Then deploy.

Caution
1) **Before deploying the air bag, see that no one is in and near the vehicle. Also, put on safety glasses.**
2) **The deployment makes the inflator of the front passenger's air bag very hot. Before handling the inflator, wait more than 30 minutes for cooling.**
3) **If the air bag module fails to deploy although the procedure is respected, do not go near the module. Contact your local distributor.**

(7) Discard the deployed air bag module according to Deployed Air Bag Module Disposal Procedures. (Refer to P.52B-44.)

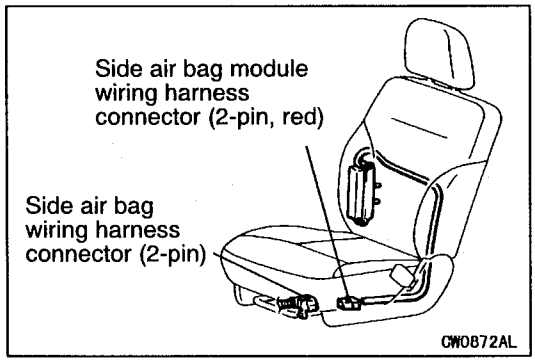

Side air bag module air bag module

(1) Disconnect the side air bag module wiring harness connector (2-pin, red) and side air bag wiring harness connector (2-pin).

Caution
The side air bag modules both in the driver's and passenger's sides should be deployed.

NOTE
Once disconnected from the side air bag wiring harness, both electrode of the side air bag module connector short automatically. This prevents the side air bag from accidental deployment caused by static etc.

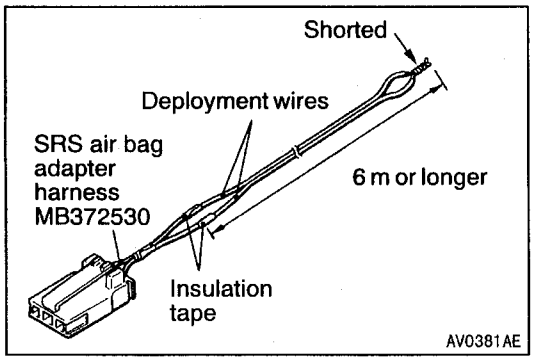

(2) Connect deployment harnesses longer than 6 m to each SRS air bag adapter harness and insulate the connections with plastic tape.
Also, connect the deployment harnesses in the other ends to short, thereby preventing the side air bag from accidental deployment caused by static etc.

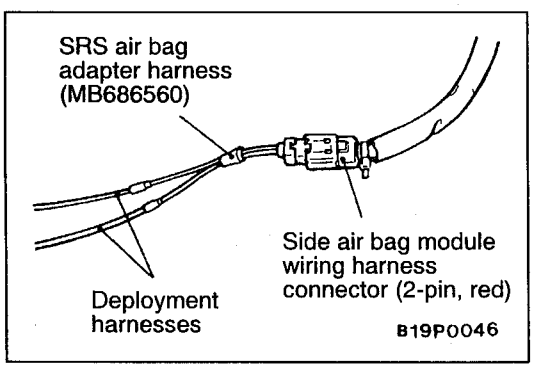

(3) Connect the SRS air bag adapter harness to the side air bag module connector (2-pin, red) and route the deployment harnesses out of the vehicle.

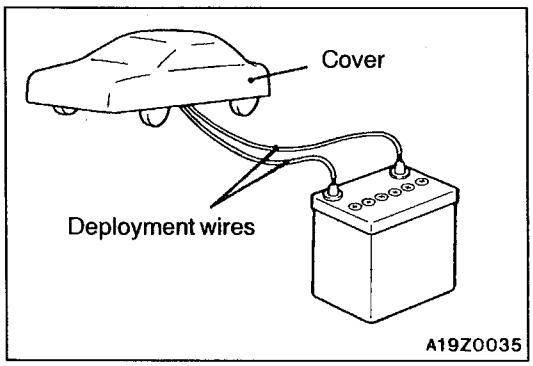

(4) Close all the doors with the windows fully closed and put a cover over the vehicle to minimize report.

Caution
The cover is required as the glass, if already damaged, may break.

(5) Disconnect the deployment harnesses as far from the vehicle as possible and connect to the terminals of the battery removed from the vehicle. Deploy the side air bag module.

Caution
1) Before deploying the air bag, see that no one is in and near the vehicle. Also, put on safety glasses.
2) The deployment makes the inflator of the side air bag very hot. Before handling the inflator, wait more than 30 minutes for cooling.
3) If the air bag module fails to deploy although the procedure is respected, do not go near the module. Contact your local distributor.

(6) Discard the deployed air bag module as specified in Deployed Air Bag Module Disposal Procedures. (Refer to P.52B-44.)

DEPLOYMENT OUTSIDE THE VEHICLE

Caution
1. This must be carried out in a wide, flat area at least 6 m away from obstacles and other people.
2. Do not deploy outside when wind is high. Even in a soft wind, ignite windward the air bag modules or front seat back assembly with side air bag module.

1. Disconnect the negative (–) and positive (+) battery cables from the battery terminals, and then remove the battery from the vehicle.

Caution
Wait at least 60 seconds before any further job after the disconnection of the battery cables. (Refer to P.52B-4.)

2. Deploy each air bag module as specified in the procedure that follows.

Driver's side air bag module

(1) Remove the driver's air bag module from the vehicle. (Refer to P.52B-26.)

Caution
Once disconnected, both electrodes of the driver's air bag module connector short automatically to prevent accidental deployment caused by static etc. Still, in consideration of the accidental deployment, store the air bag module on flat place with deployment surface facing up. Also, do not put anything on it.

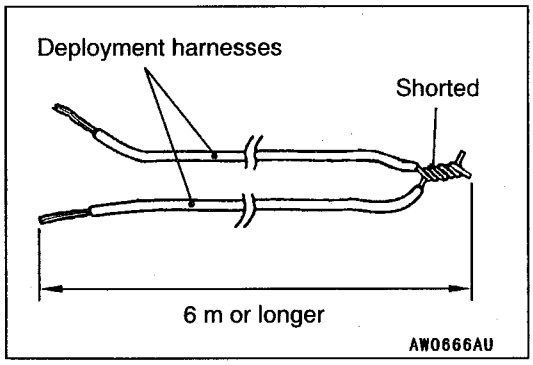

(2) Prepare two wires longer than 6 m for deployment and connect the terminals in one end to short-circuit. This is to prevent accidental deployment caused by static etc.
(3) Touch the vehicle's body with bare hands to discharge static in you.

Caution
Never fail to do Step (3) in order to prevent accidental deployment caused by static.

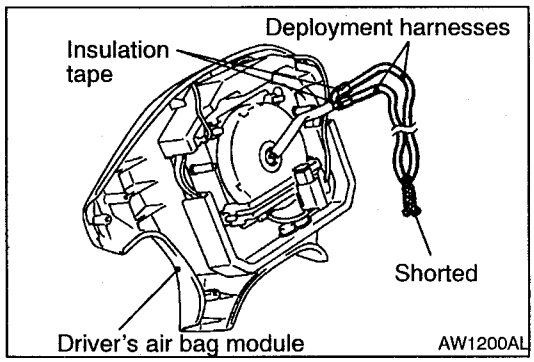

(4) Using pliers, cut the driver's air bag module connector from the harnesses. Connect the deployment harnesses to each harness that has been cut and insulate the connections with plastic tape.

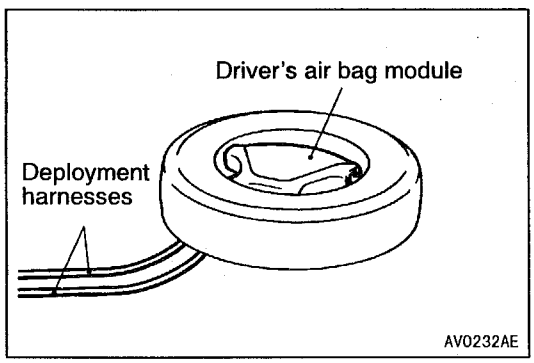

(5) Install a nut to the bolt behind the driver's air bag module and tie thick wire there for securing.
(6) Route the deployment harnesses connected to the driver's air bag module beneath an old tyre and wheel assembly. Then, using the wire tied to the bolt, secure the driver's air bag module to the tyre and wheel assembly with the deployment surface facing up.

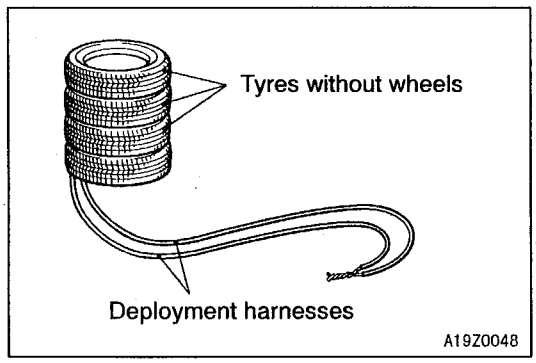

(7) Place three old tyres without wheels on the tyre secured with the driver's air bag module.

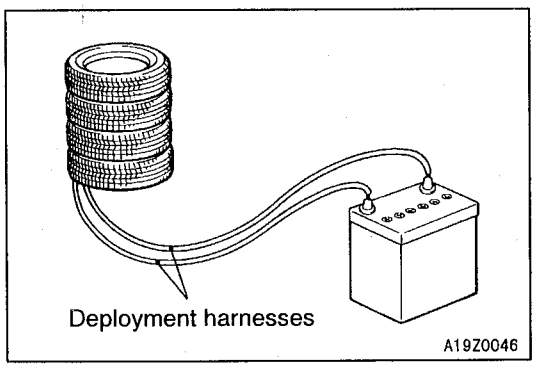

(8) Separate the deployment harnesses as far from the driver's side air bag module as possible and connect to the terminals of the battery removed from the vehicle. Then deploy.

Caution

1) **Before the deployment, see that no one is near around the driver's air bag module.**
2) **The deployment makes the inflator of the driver's air bag very hot. Before handling the inflator, wait more than 30 minutes for cooling.**
3) **If the driver's air bag module fails to deploy although the procedure is respected, do not go near the module. Contact your local distributor.**

(9) Discard the deployed air bag module as specified in Deployed Air Bag Module Disposal Procedures. (Refer to P.52B-44.)

Front passenger's air bag module

(1) Remove the front passenger's air bag module from the vehicle. (Refer to P.52B-27.)

Caution

Once disconnected, both electrodes of the front passenger's air bag module connector short automatically to prevent accidental deployment caused by static etc. Still, in consideration of the accidental deployment, store the air bag module on flat place with deployment surface facing up. Also, do not put anything on it.

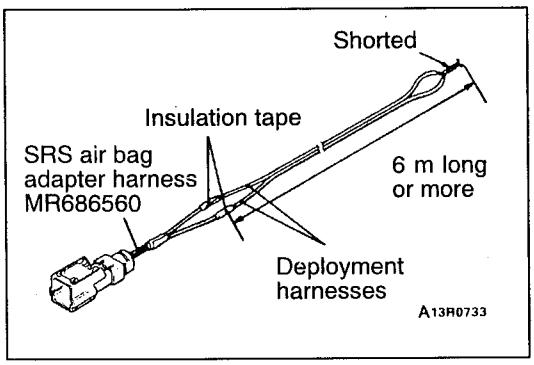

(2) Connect deployment wires 6 m or longer with the SRS air bag adapter harness respectively. Insulate the connection with tape.
Also, connect the other ends of the deployment harness each other to short, thereby preventing the front passenger's air bag from accidental deployment caused by static etc.

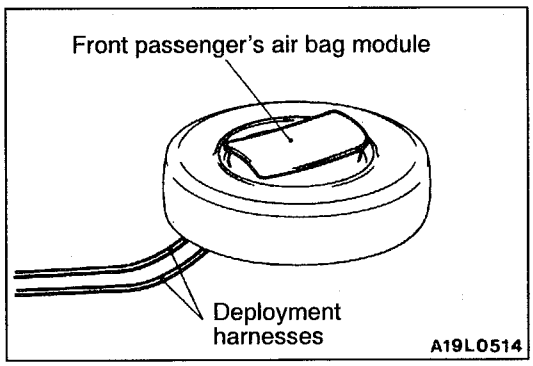

(3) Route the SRS air bag adapter harness with the deployment harnesses beneath an old tyre and wheel assembly. Then, connect the harnesses to the front passenger's air bag module.
(4) Route a thick wire through the holes in the front passenger's air bag module bracket. With the deployment surface facing up, secure the front passenger's air bag module to the old tyre and wheel assembly.

Caution
1) **The deployment wires must not be tight below the wheel. Otherwise, the adapter harness could get damaged at deployment.**
2) **Place the connector of the SRS air bag adapter harness so that it is not clamped by the tyre at deployment.**

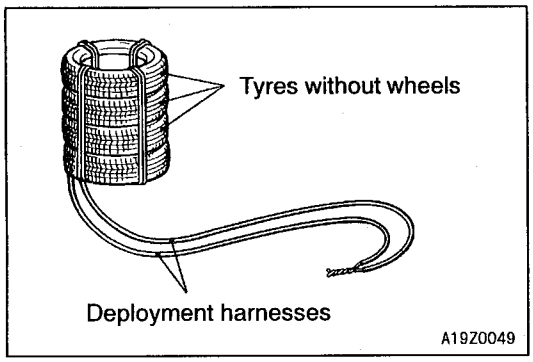

(5) Put three old tyres without wheels on the tyre secured to the front passenger's air bag module. Secure all the tyres with ropes (4 locations).

NOTE
The tyres must be bound because the passenger's air bag inflates more than the driver's air bag.

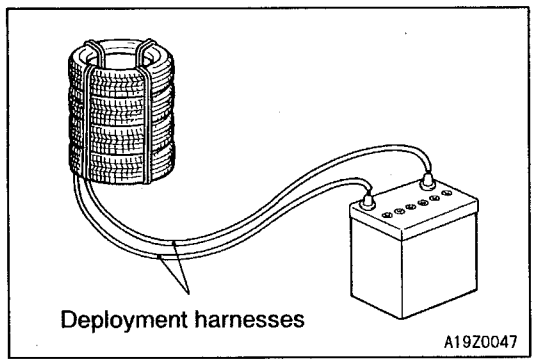

(6) Disconnect the deployment harnesses as far from the front passenger's air bag module as possible and connect the harnesses to the battery removed from the vehicle.

Caution
1) **Before the deployment, see that no one is near the front passenger's air bag module.**
2) **The deployment makes the inflator of the front passenger's air bag very hot. Before handling the inflator, wait more than 30 minutes for cooling.**
3) **If the front passenger's air bag module fails to deploy although the procedure is respected, do not go near the module. Contact your local distributor.**

(7) Discard the deployed air bag module as specified in Deployed Air Bag Module Disposal Procedures. (Refer to P.52B-44.)

Side air bag module

(1) Remove the front seat back assembly with side air bag module from the vehicle. (Refer to P.52B-28.)

Caution
Once disconnected, both electrodes of the side air bag module connector short automatically to prevent accidental deployment caused by static etc. Still, in consideration of the accidental deployment, store the air bag module on flat place with deployment surface facing up. Also, do not put anything on it.

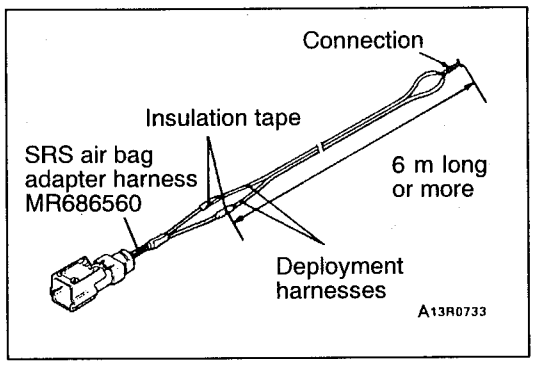

(2) Connect deployment wires 6 m or longer with the SRS air bag adapter harness respectively. Insulate the connections with tape.
Also, connect the other ends of the deployment wires each other to short, thereby preventing the side air bag from accidental deployment caused by static etc.

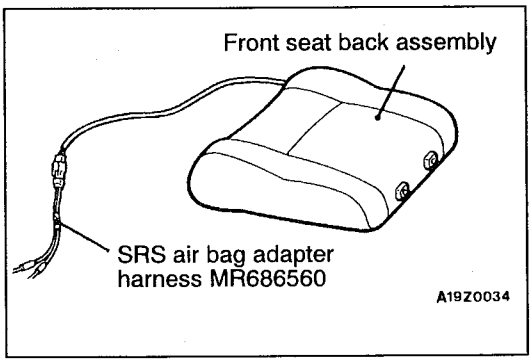

(3) Place the front seat back assembly with its back contact with the ground.
(4) Connect the SRS air bag adapter harness with the deployment harnesses to the side air bag module connector.

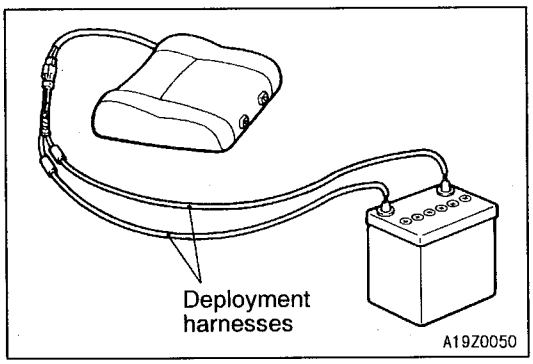

(5) Disconnect the deployment harnesses as far from the front seat back assembly possible and connect the harnesses to the battery removed from the vehicle. Then, deploy.

Caution
1) **Before the deployment, see that no one is near the front seat back assembly.**
2) **The deployment makes the inflator of the side air bag very hot. Before handling the inflator, wait more than 30 minutes for cooling.**
3) **If the side air bag module fails to deploy although the procedure is respected, do not go near the module. Contact your local distributor.**

(6) Remove the deployed air bag module from the seat back assembly and discard as specified in the procedure (Refer to P.52B-44.).

DEPLOYED AIR BAG MODULE DISPOSAL PROCEDURES

After the deployment, discard the air bag modules the same way as any other scrap parts, respecting local laws and/or legislation that may be in force.
However, note the following points at the disposal:

1. The inflators will be quite hot just after deployment. So, wait at least 30 minutes to cool it before handling.
2. Do not put water or oil on the air bags after deployment.
3. There may be, adhered to the deployed air bag modules, material that could irritate the eye and/or skin, so put on gloves and safety glasses when handling the deployed air bag module.

Caution
If after following these precautions, any material does get into the eyes or on the skin, immediately rinse the affected area with a large amount of clean water. If any irritation develops, seek medical attention.

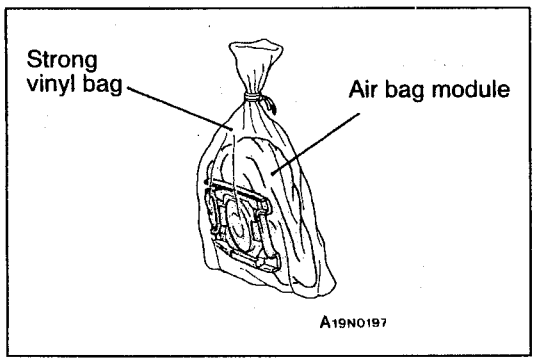

4. Discard the air bag module in a vinyl bag tightly sealed.
5. Be sure to always wash your hands after completing this operation.